TABLE OF CONTENTS

Model No. 96A4A-AP

AIR INTAKE ASSEMBLY	15	B3
BODY PANEL ASSEMBLY	1	A3
CAM CHAIN ASSEMBLY	30	C4
CAM SHAFT VALVE ASSEMBLY	29	C3
CARBURETOR	21	B9
CLUTCH ASSEMBLY	34	C8
CONTROL SWITCH HOUSING ASSEMBLY	46	D6
COOLING ASSEMBLY	18	B6
CRANK BALANCER ASSEMBLY	28	C2
CRANKCASE ASSEMBLY	24	B12
CRANKCASE COVER ASSEMBLY	25	B13
CRANKSHAFT ASSEMBLY	26	B14
CYLINDER ASSEMBLY	23	B11
CYLINDER HEAD ASSEMBLY	22	B10
DECALS	3	A5
ELECTRICAL COMPONENTS ASSEMBLY	45	D5
ENGINE AND EXHAUST	17	B5
FRAME AND RELATED PARTS	4	A6
FRONT BEVEL GEAR ASSEMBLY	41	D1
FRONT SUSPENSION ASSEMBLY	7	A9
FUEL TANK ASSEMBLY	13	B1
GEAR SHIFTING ASSEMBLY	39	C13
HIGH/LOW SHIFTER ASSEMBLY	40	C14
HYDRAULIC BRAKE ASSEMBLY	12	A14
HYDRAULIC BRAKE CONTROL ASSEMBLY	11	A13
MAGNETO ASSEMBLY	44	D4
MECHANICAL BRAKE ASSEMBLY	10	A12
OIL PUMP/ FILTER ASSEMBLY	32	C6
REAR AXLE ASSEMBLY	19	B7
REAR BEVEL GEAR ASSEMBLY	42	D2
REAR SUSPENSION ASSEMBLY	8	A10
RECOIL STARTER ASSEMBLY	31	C5
RELATED ITEMS	Back Cover	D8
REVERSE SHIFT LEVER ASSEMBLY	14	B2
SEAT ASSEMBLY	5	A7
SECONDARY DRIVE ASSEMBLY	38	C12
SECONDARY TRANSMISSION ASSEMBLY	36	C10
SPEEDOMETER DRIVE ASSEMBLY	37	C11
STARTER CLUTCH ASSEMBLY	27	C1
STARTER MOTOR ASSEMBLY	43	D3
STEERING ASSEMBLY	6	A8
STORAGE BOX AND BATTERY ASSEMBLY	16	B4
TAILLIGHT ASSEMBLY	2	A4
THROTTLE CASE ASSEMBLY	47	D7
TRANSMISSION ASSEMBLY	35	C9
WATER PUMP ASSEMBLY	33	C7
WHEEL AND TIRE ASSEMBLY	9	A11
WIRING HARNESS ASSEMBLY	20	B8

NOTE: The illustrations used in this Parts Manual are for reference to replacement part numbers only and are not to be used for assembly. For assembly procedures, use Arctic Cat Inc. Service Manuals.
Underlined part numbers are new for the 1996 model year.

www.powersports.com
800-407-7219

© 2001 Arctic Cat Inc.
®™ Trademarks of Arctco, Inc., Thief River Falls, MN 56701

Printed September 2001

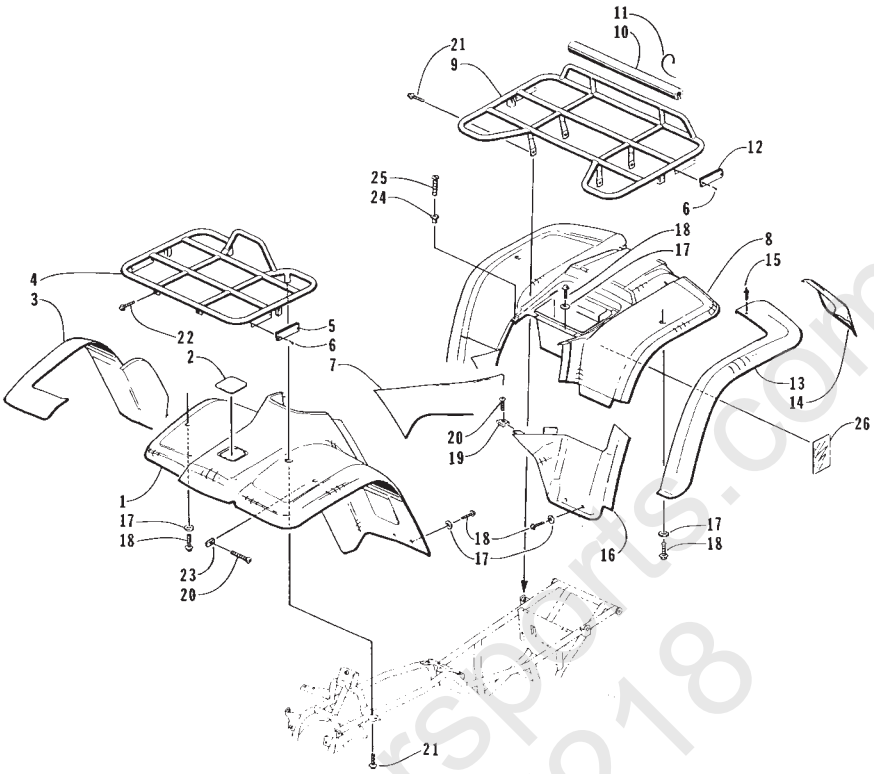

BODY PANEL ASSEMBLY

0732-341

Ref.	Part No.	Qty.	Description	Ref.	Part No.	Qty.	Description
1	0506-156	1	Panel, Fender - Front	14	0406-086	1	Mud Flap - Right
2	0406-153	1	Cover, Radiator Access		0406-087	1	Mud Flap - Left
3	0506-154	1	Flare - Front Right	15	0423-046	54	Rivet, Plastic
	0506-155	1	Flare - Front Left	16	0506-160	1	Fender Extension - Rear Right
4	0506-104	1	Rack - Front		0506-161	1	Fender Extension - Rear Left
5	0606-526	2	Yellow Reflector	17	0423-010	14	Washer, Body
6	0623-269	8	Clip, Retaining	18	8474-616	14	Screw, Machine
7	0506-164	1	Panel, Side - Right	19	0423-060	2	Clip, Tinerman
	0506-165	1	Panel, Side - Left	20	0623-302	2	Screw, Self-Tapping
8	0506-157	1	Panel, Fender - Rear	21	8409-020	6	Screw, Cap
9	0506-103	1	Rack - Rear	22	8408-812	2	Screw, Cap
10	0406-269	1	Wrap, Tube - Rear Rack	23	0423-031	2	Nut, Speed
11	0123-788	7	Tie, Cable	24	0123-010	2	Nut, Expansion
12	0606-029	2	Red Reflector	25	0423-068	2	Screw, Machine
13	0406-082	1	Flare - Rear Right	26	0706-990	AR	Tape, Foil
	0406-083	1	Flare - Rear Left				

www.ATVPowersports.com 800-407-7218

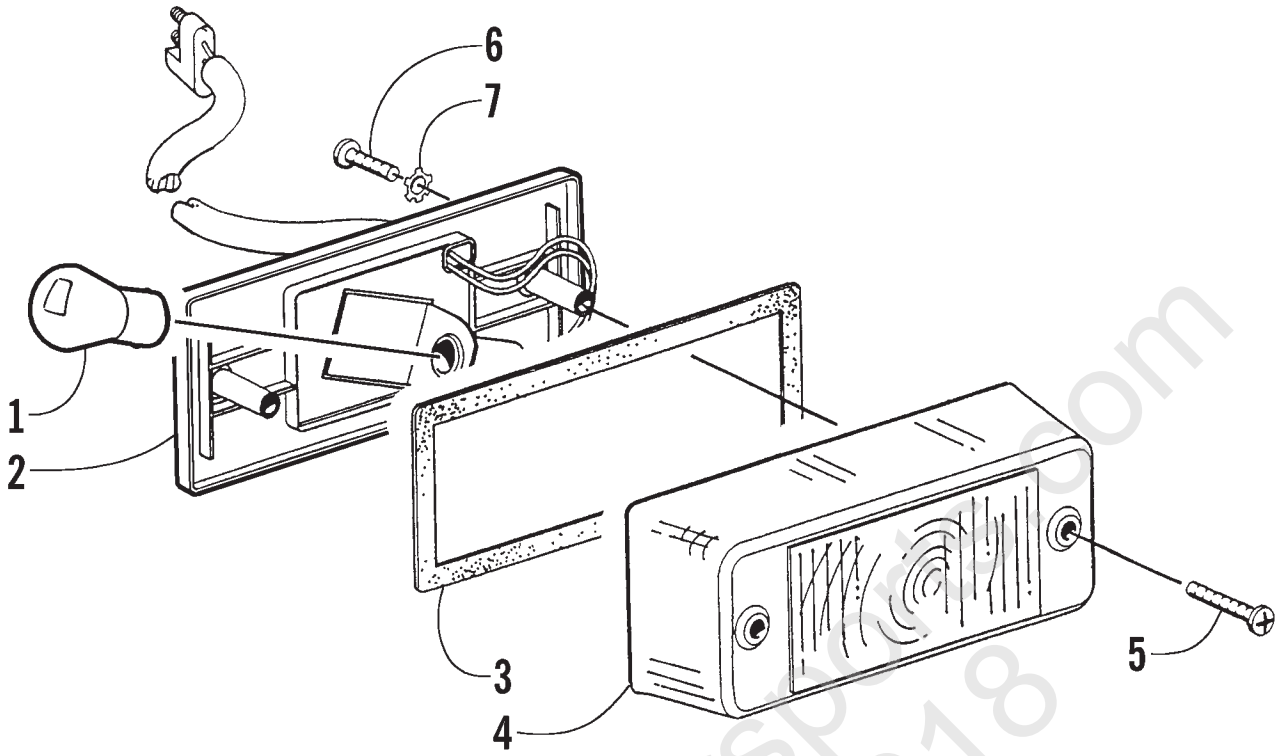

TAILLIGHT ASSEMBLY

(Complete Taillight Assembly p/n 0409-002)

0732-336

Ref.	Part No.	Qty.	Description	Ref.	Part No.	Qty.	Description
1	0109-460	1	Bulb, Stop Taillight	5	0409-010	2	Screw, Taillight
2	0409-011	1	Taillight w/Socket Assembly	6	0623-302	2	Screw, Self-Tapping
3	0409-012	1	Gasket, Taillight	7	8053-212	2	Washer, Lock
4	0409-007	1	Lens, Taillight				

World of Powersports.com
800-467-7218

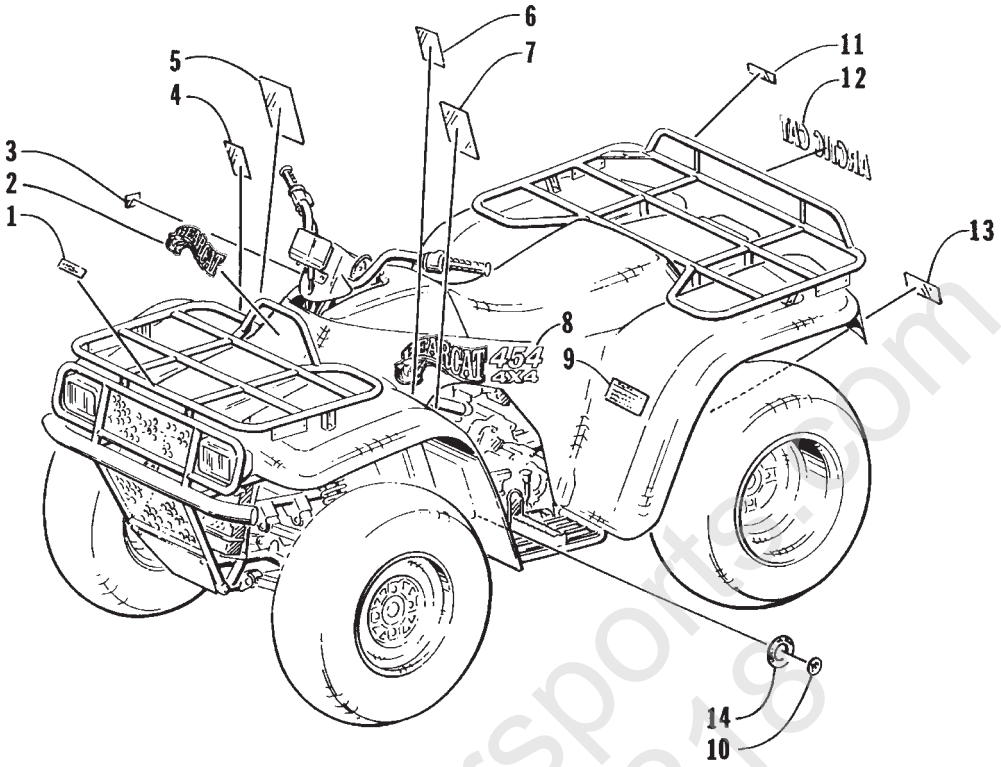

DECALS

0732-340

Ref.	Part No.	Qty.	Description	Ref.	Part No.	Qty.	Description
1	0411-006	1	Decal, Warning - Front Rack Load	9	0411-012	1	Decal, Warning - Tire Pressure
2	0411-018	1	Decal, “Bearcat” - Front	10	0411-003	1	Decal, Shift Pattern
3	0411-011	1	Decal, Caution - Electrical	11	0411-007	1	Decal, Warning - Rear Rack Load
4	0411-045	1	Decal, Warning - Turn	12	0411-043	1	Decal, “Arctic Cat”
5	0411-008	1	Decal, Warning Reverse/Pre Ride	13	0411-013	1	Decal, Warning - Towing
6	0411-040	1	Decal, Warning - Age	14	0411-009	1	Decal, Hi/Low Range
7	0411-010	1	Decal, Warning - General				
8	0411-014	1	Decal, “Bearcat” - Side Right				
	0411-015	1	Decal, “Bearcat” - Side Left				

World Powersports
800-407-7218

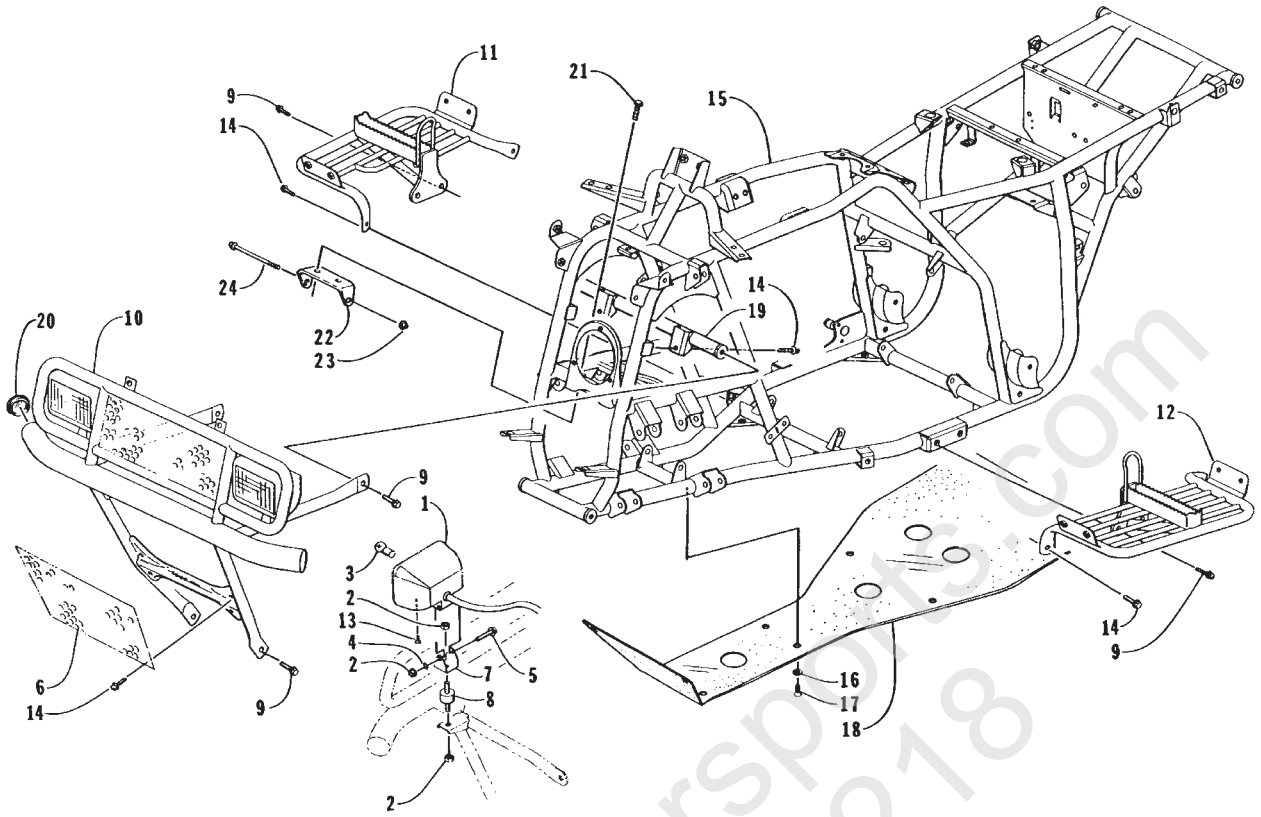

FRAME AND RELATED PARTS

0735-385

Ref.	Part No.	Qty.	Description	Ref.	Part No.	Qty.	Description
1	0409-001	2	Headlight	11	0506-066	1	Footrest - Right
2	8474-813	6	Nut, Hex	12	0506-067	1	Footrest - Left
3	0409-005	2	Bulb, Headlight	13	0123-590	2	Screw, Machine
4	8053-242	2	Washer, Lock	14	8408-816	10	Screw, Cap
5	8408-850	2	Screw, Cap	15	0506-133	1	Frame
6	0406-175	1	Screen, Bumper	16	0423-010	10	Washer, Shoulder
7	0406-261	2	Yoke, Headlight	17	8474-616	10	Screw, Machine
8	0406-262	2	Mount, Headlight	18	0406-095	1	Panel, Belly
9	8409-020	8	Screw, Cap	19	0506-079	1	Tube, Cross
10	0506-075	1	Bumper - Front	20	0406-130	2	Cap, Bumper

World of Powersports.com
800-457-7218

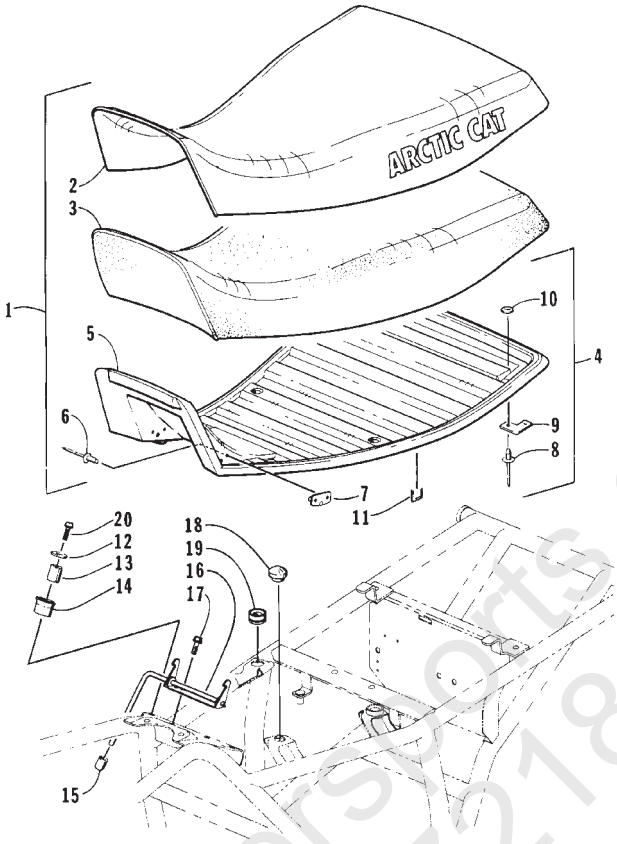

SEAT ASSEMBLY

0732-342

Ref.	Part No.	Qty.	Description	Ref.	Part No.	Qty.	Description
1	5990-012	1	Seat - Assembly (inc. 2-11)	11	0624-263	50	• Staple
2	0506-054	1	• Cover, Seat	12	8050-217	2	Washer
3	0506-056	1	• Foam, Seat	13	0406-199	2	Collar, Front Seat Base
4	0506-167	1	• Base, Seat - Assembly (inc. 5-10)	14	0406-171	2	Bumper, Seat Base - Front
5	0506-166	1	• • Base, Seat	15	0623-404	1	Cap, Protector
6	8061-628	4	• • Rivet	16	0406-103	1	Latch, Seat - Assembly
7	0506-147	1	• • Pin, Seat Base - Front	17	8477-616	2	Screw, Machine
8	8060-630	4	• • Rivet	18	0406-172	2	Bumper, Seat Base - Center
9	0406-268	2	• • Plate, Seat Retainer	19	0406-270	2	Bumper, Seat Base - Center
10	8050-152	4	• • Washer	20	8408-620	2	Screw, Cap

World of Powersports.com
800-407-7218

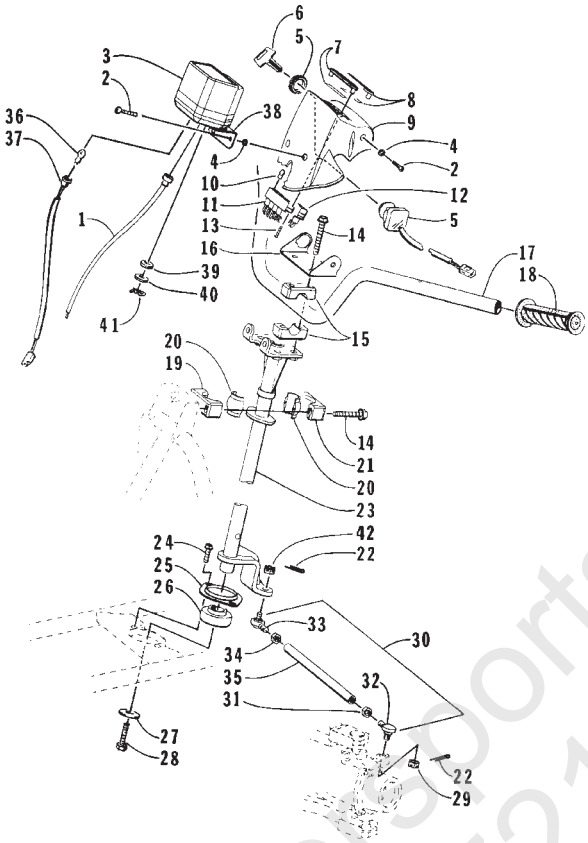

STEERING ASSEMBLY

0732-343

Ref.	Part No.	Qty.	Description	Ref.	Part No.	Qty.	Description
1	0487-005	1	Cable, Speedometer	21	0605-171	1	Cap, Bearing - Steering
2	8477-616	3	Screw, Machine	22	0117-868	4	Pin, Cotter
3	0420-003	1	Speedometer	23	0505-012	1	Post, Steering
4	0423-052	3	Collar, Body	24	8408-816	2	Screw, Cap
5	3430-013	1	Switch, Ignition - Assembly (inc. 6)	25	0602-233	1	Flange, Bearing
6	3409-007	1	• Key, Ignition - Blank (C Series)	26	0107-223	1	Bearing - w/o Lock Collar
	3409-011	1	• Key, Ignition - Blank (D Series)	27	0123-570	1	Washer
7	0420-011	1	Bezel/Lens, Warning - Assembly	28	8409-020	1	Screw, Cap
8	0420-012	1	Bezel/Lens, Shifting - Assembly	29	0423-014	4	Nut, Hex Castle
9	0405-019	1	Instrument Pod	30	0505-001	2	Tie Rod, Assembly (inc. 31-35)
10	0420-013	9	Bulb, Light Bar	31	8480-010	2	• Nut, Hex
11	0420-001	1	Light, Warning - Assembly	32	0405-011	2	• Ball Joint, Tie Rod - Left
12	0420-004	1	Light, Shift Indicator - Assembly	33	0405-010	2	• Ball Joint, Tie Rod - Right
13	0123-950	4	Screw, Self-Tapping	34	0423-013	2	• Nut, Hex
14	8408-860	6	Screw, Cap	35	0405-032	2	• Tie Rod
15	0405-035	4	Cap, Steering Adjuster	36	0620-149	1	Bulb, Speedometer
16	0506-139	1	Bracket, Key Switch	37	0420-014	1	Harness, Speedometer
17	0505-007	1	Tube, Handlebar	38	0420-018	1	Bracket, Speedometer
18	0405-013	2	Grip, Handlebar	39	0420-016	2	Mount, Rubber
19	0705-064	1	Housing, Bearing - Upper	40	0420-017	2	Washer
20	0405-020	2	Bearing, Steering Post	41	0420-015	2	Pin, Retainer

Home of Powersports.com 800-437-7218

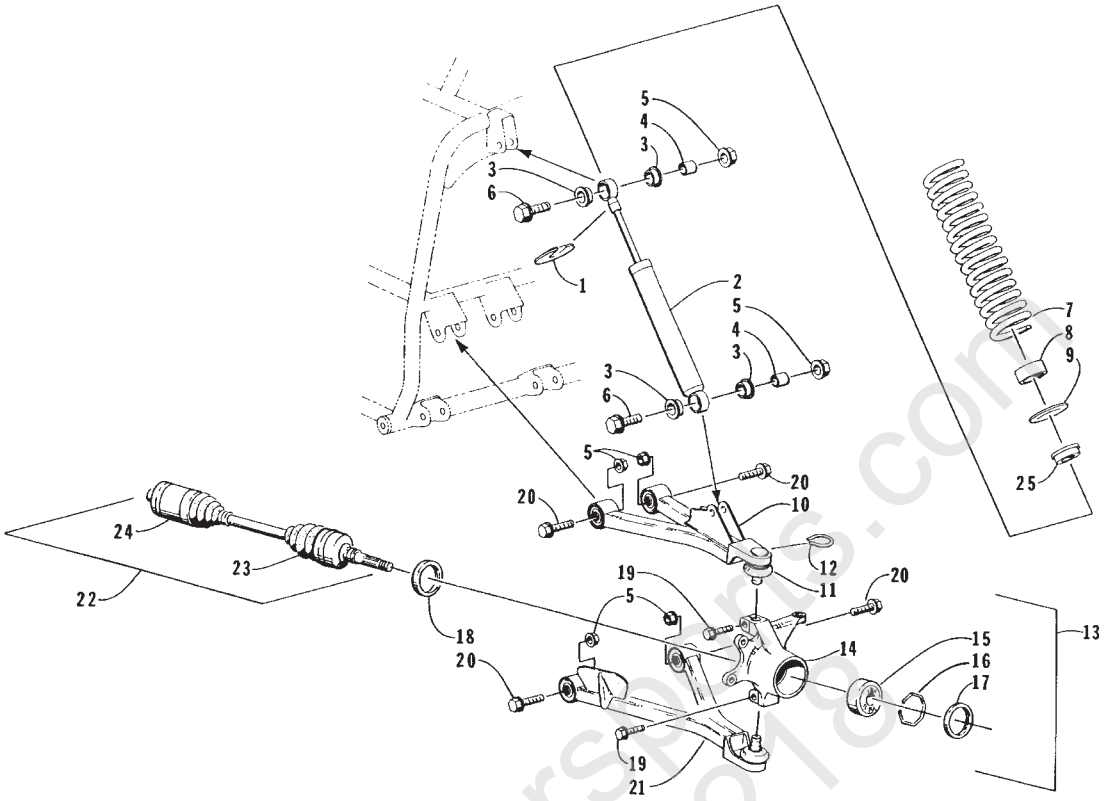

FRONT SUSPENSION ASSEMBLY

0732-344

Ref.	Part No.	Qty.	Description
1	0603-033	2	Retainer, Spring
2	0403-001	2	Shock Absorber - Front (inc. 3-4)
3	0604-310	8	• Bushing, Shock Absorber
4	0403-028	4	• Sleeve, Shock
5	8478-013	12	Nut, Lock
6	8409-040	4	Screw, Cap
7	0403-002	2	Spring, Front
8	0403-025	2	Collar, Spring
9	0403-013	2	Washer, Spring
10	0503-016	1	A-Arm, Upper Right - Assembly (inc. two No. 11-12)
	0503-017	1	A-Arm, Upper Left - Assembly (inc. two No. 11-12)
11	0405-001	4	• Ball Joint - Front
12	0423-009	2	• Clip, Ball Joint
13	0505-016	1	Knuckle - Assembly - Right (inc. 14-18)
	0505-017	1	Knuckle - Assembly - Left (inc. 14-18)
14	0505-010	1	• Knuckle, Steering - Right
	0505-011	1	• Knuckle, Steering - Left
15	0402-085	2	• Bearing, Wheel Hub - Front
16	0423-034	2	• Clip, Bearing
17	0402-089	2	• Seal, Wheel Bearing - Front
18	0402-069	2	• Seal, Wheel Bearing - Front
19	8409-030	4	Screw, Cap
20	8409-060	8	Screw, Cap
21	0503-013	1	A-Arm, 4x4 Lower Left (inc. two No. 11-12)
	0503-012	1	A-Arm, 4x4 Lower Right (inc. two No. 11-12)
22	0402-098	2	Axle, Drive - Front
23	0436-038	2	Repair Kit, Outer Boot - Front Axle
24	0436-037	2	Repair Kit, Inner Boot - Front Axle
25	0403-027	2	Retainer, Spring - Lower

Works of Powersports.com 800-407-7218

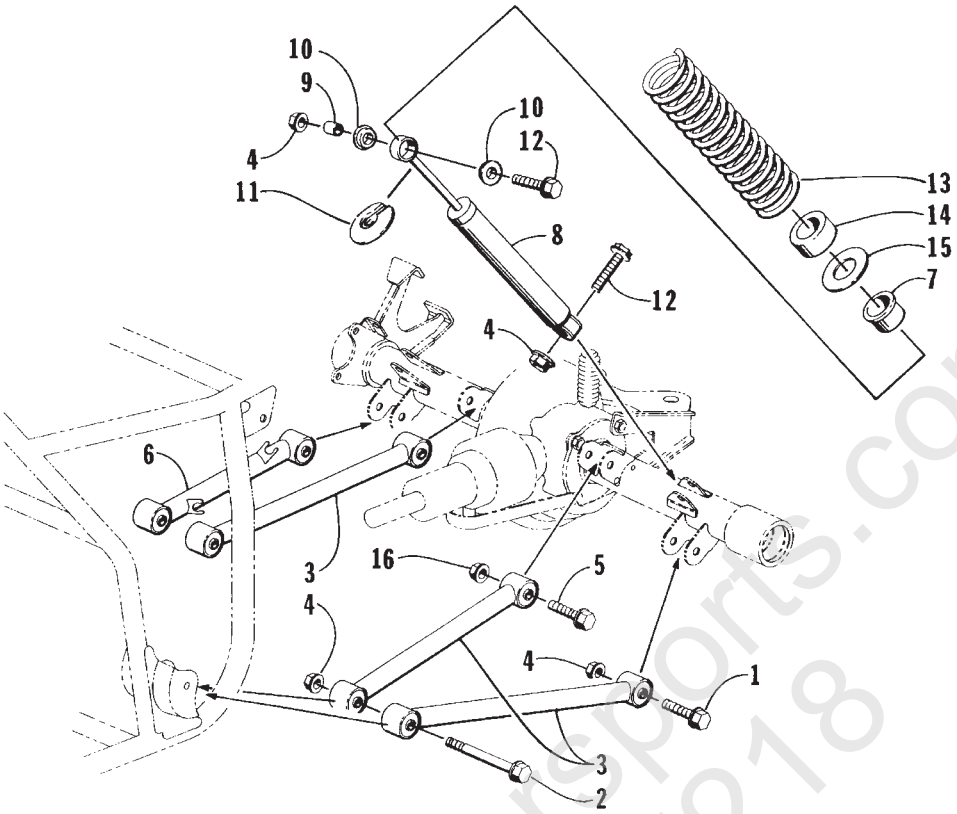

REAR SUSPENSION ASSEMBLY

0732-345

Ref.	Part No.	Qty.	Description	Ref.	Part No.	Qty.	Description
1	8409-060	3	Screw, Cap	9	0403-028	4	• Sleeve, Shock
2	8409-000	2	Screw, Cap	10	0604-310	8	• Bushing, Shock Absorber
3	0504-001	3	Arm, Swing	11	0603-033	2	Retainer, Spring
4	8478-013	9	Nut, Hex	12	8409-040	4	Screw, Cap
5	8409-055	1	Screw, Cap	13	0404-006	2	Spring - Rear
6	0504-005	1	Arm, Swing	14	0403-025	2	Collar, Spring
7	0403-027	2	Retainer, Spring - Lower	15	0403-013	2	Washer, Spring Adjustment
8	0404-001	2	Shock Absorber - Rear (inc. 9-10)				

World of Powersports.com
800-457-7218

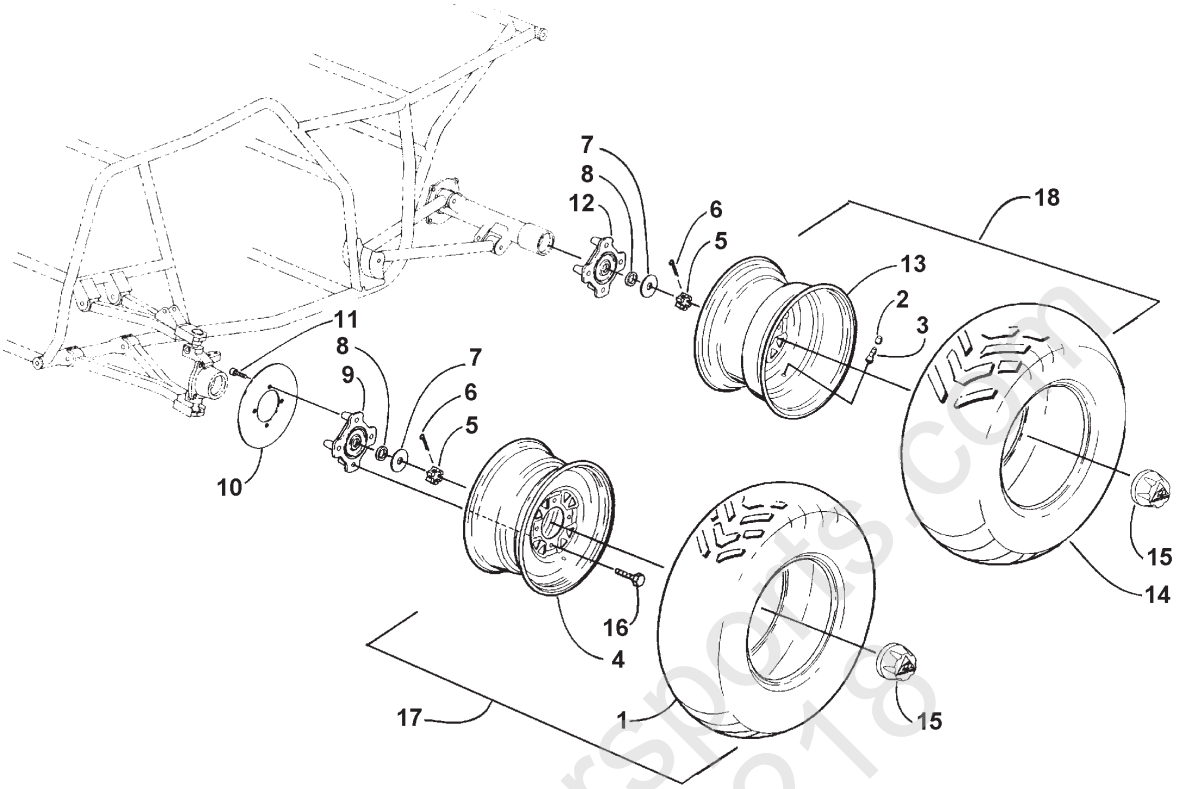

WHEEL AND TIRE ASSEMBLY

0735-756 * Not Illustrated

Ref.	Part No.	Qty.	Description
1	0402-007	2	Tire, Front
2	0402-140	4	Cap, Valve Stem
3	0402-064	4	Valve, Stem
4	0402-005	2	Wheel - Front
5	0423-015	4	Nut, Hex
6	0123-458	4	Pin, Cotter
7	0423-021	4	Washer
8	0402-099	4	Seal, Hub
9	0402-088	2	Hub, Wheel - Front
10	0402-009	3	Disc, Brake
11	0423-029	12	Screw, Machine
12	0402-080	2	Hub, Wheel - Rear
13	0402-006	2	Wheel - Rear
14	0402-008	2	Tire - Rear
15	0403-011	4	Cap, Wheel - Center
16	8409-020	16	Screw, Cap
17	0402-074	1	Wheel and Tire Assy - RH (inc. 1, 4, and 16) *
	0402-075	1	Wheel and Tire Assy - LH (inc. 1, 4, and 16) *
18	0402-076	1	Wheel and Tire Assy - RH (inc. 2, 3, 13, and 14) *
	0402-077	1	Wheel and Tire Assy - LH (inc. 2, 3, 13, and 14) *

World of Powersports.com 800-407-7218

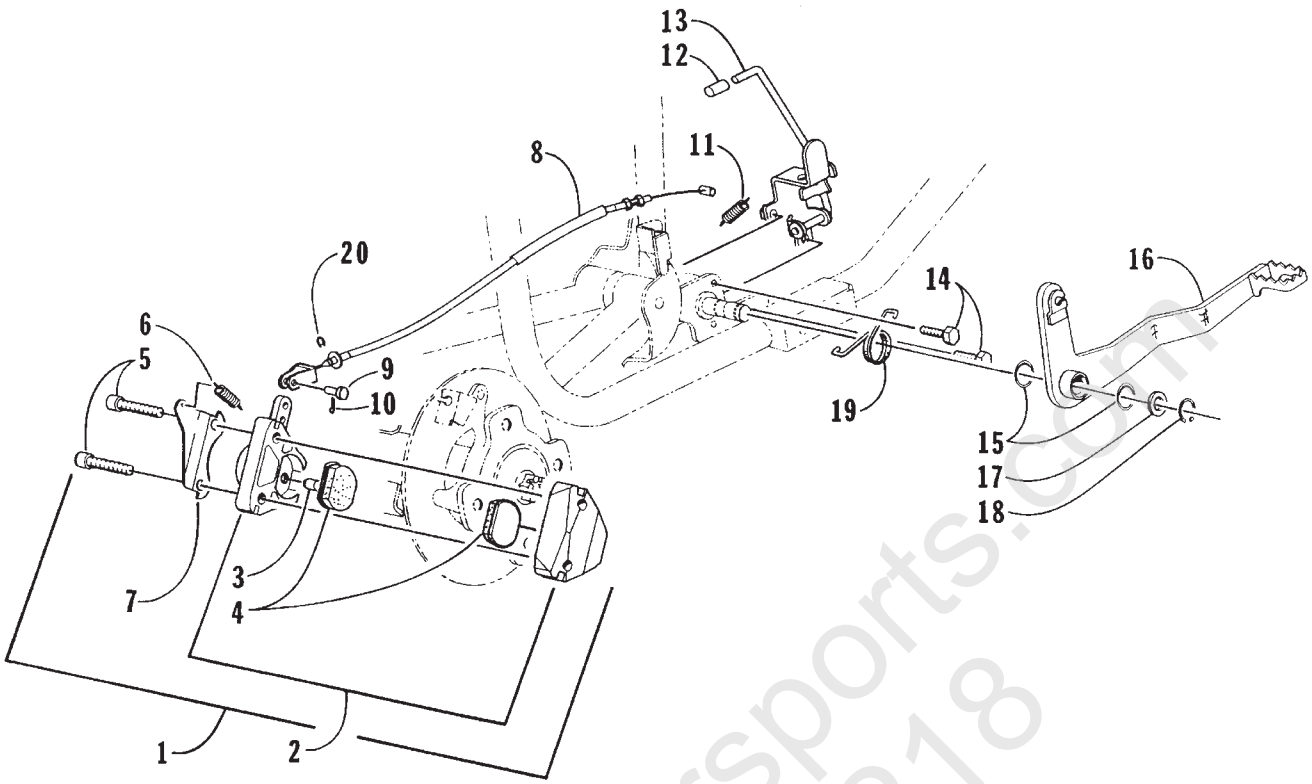

MECHANICAL BRAKE ASSEMBLY

0732-337

Ref.	Part No.	Qty.	Description	Ref.	Part No.	Qty.	Description
1	0402-128	1	Caliper, Mechanical Brake - Assembly (inc. 2-3)	10	0117-868	1	Pin, Cotter
				11	0115-602	1	Spring, Brake Arm Return
2	0502-020	1	• Pad Set	12	0423-064	1	Cap, Protector - Red
3	0402-125	1	• Pin, Actuator	13	0502-027	1	Brake, Parking
4	0402-116	1	Bracket, Spring Retaining	14	8408-616	2	Screw, Cap
5	0423-058	2	Screw, Socket Head	15	0670-183	2	O-Ring
6	0402-129	1	Spring, Mechanical Brake	16	0502-024	1	Lever, Foot Brake
7	0124-057	1	E-Ring	17	0423-027	1	Washer, Brake Lever
8	0487-004	1	Cable, Brake - Rear	18	0623-237	1	Ring, Snap
9	0423-049	1	Pin	19	0402-144	1	Spring, Foot Brake

World of Powersports.com
800-467-7218

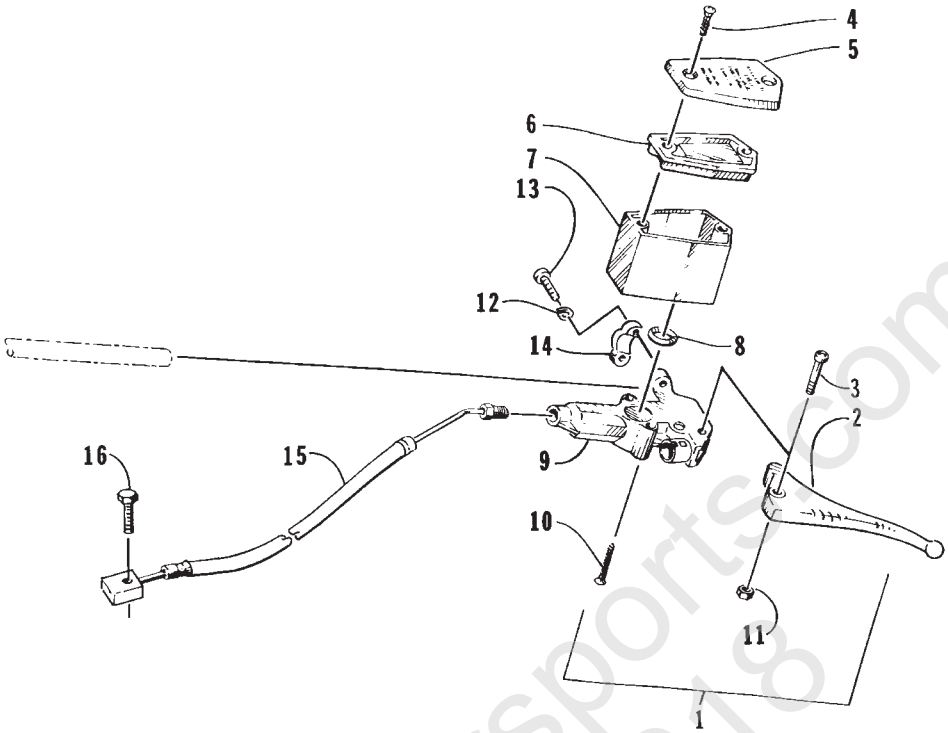

HYDRAULIC BRAKE CONTROL ASSEMBLY

0732-338 *Not a Service Part

Ref.	Part No.	Qty.	Description	Ref.	Part No.	Qty.	Description
1	0502-021	1	Brake, Lever - Assembly (inc. 2-14)	9	*	1	• Master Cylinder
2	0402-049	1	• Lever, Brake	10	0623-432	2	• Screw, Reservoir Mount
3	0623-430	1	• Bolt, Lever Mounting	11	0623-613	1	• Nut, Lock
4	0623-506	2	• Screw, Cover - Master Cylinder	12	8052-212	2	• Washer, Lock
5	0602-742	1	• Cover, Master Cylinder	13	0623-613	2	• Screw, Clamp
6	0602-741	1	• Gasket, Cover - Master Cylinder	14	0602-907	1	• Clamp
7	0602-740	1	• Reservoir, Hydraulic Brake	15	0402-050	1	Hose, Master Cylinder
8	0602-587	1	• O-Ring, Reservoir	16	8408-625	1	Screw, Cap

World Powersports.com 800-407-7218

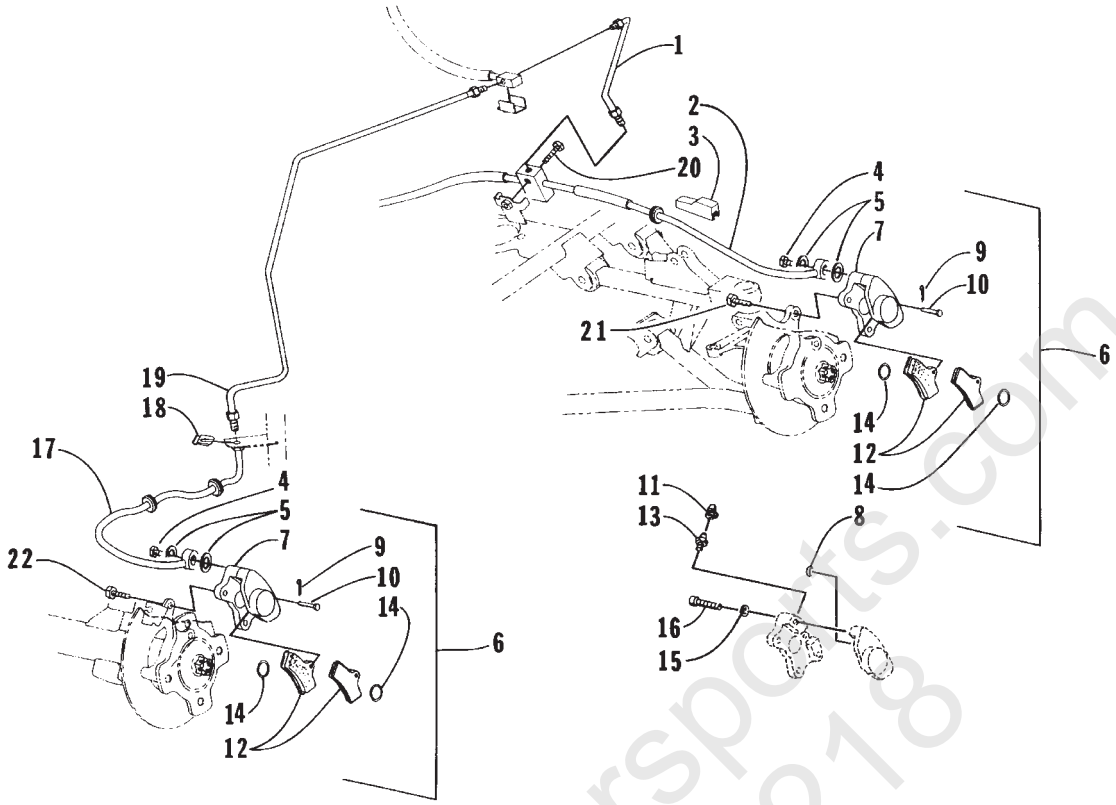

HYDRAULIC BRAKE ASSEMBLY

0732-339 *Not a Service Part ** Not Illustrated

Ref.	Part No.	Qty.	Description	Ref.	Part No.	Qty.	Description
1	0402-053	1	Tube, Brake Line - Front	11	0402-143	3	• Cap, Bleeder Valve
2	0402-051	1	Hose, Brake - Front	12	0502-019	1	• Pad, Hydraulic Brake (Set)
3	0402-073	2	Block, Mounting	13	0402-167	3	• Valve, Bleeder
4	0423-038	3	Bolt, Oil	14	0402-141	6	• O-Ring, Hydraulic Brake Caliper
5	0423-039	6	Washer, Crush	15	0402-165	6	• Washer
6	0402-010	2	Caliper, Brake - Right Front (inc. 7-13 and two No. 14-16)	16	0402-166	6	• Screw, Socket Head
				17	0402-052	1	Hose, Brake - Rear
	0402-011	1	Caliper, Brake - Left Front and Rear (inc. 7-13 and two No. 14-16)	18	0402-115	1	Clip, Brake Line
				19	0402-054	1	Tube, Brakeline - Rear
7	*	3	• Housing, Caliper	20	8408-625	1	Screw, Cap
8	0402-164	3	• O-Ring	21	8408-825	2	Screw, Cap
9	0117-868	3	• Pin, Cotter	22	8408-820	4	Screw, Cap
10	0402-142	3	• Pin, Hydraulic Brake Caliper	23	0402-143	2	Cap, Bleeder Valve **

World of Powersports
800-457-7218

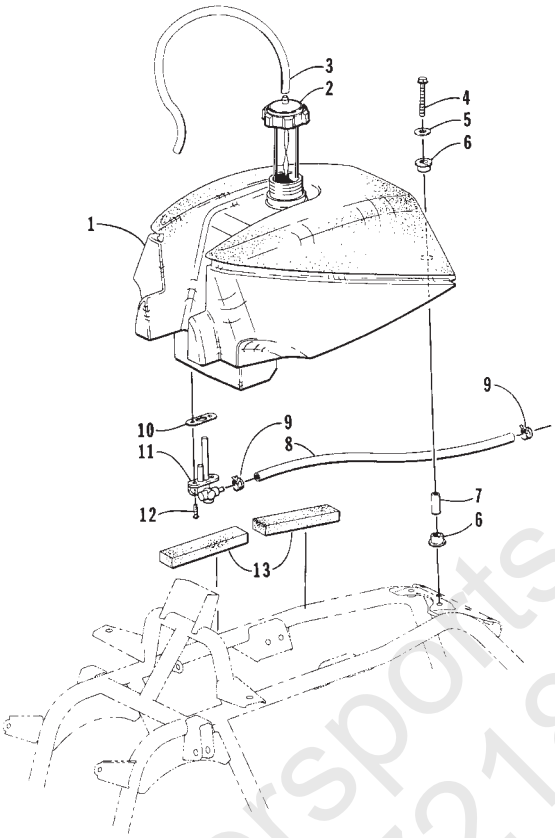

FUEL TANK ASSEMBLY

0732-346 * Not a Service Part

Ref.	Part No.	Qty.	Description	Ref.	Part No.	Qty.	Description
1	0570-003	1	Tank, Fuel (inc. 2 and 6-9)	8	0610-007	AR	Line, Fuel
2	0470-315	1	• Cap, Fuel Tank (inc. 3)	9	0423-048	2	Clamp, Hose - Spring
3	0610-007	AR	• Line, Fuel Cap Vent	10	*	1	Gasket, Fuel
4	8408-650	2	Screw, Cap	11	0470-314	1	Valve, Shut-Off (inc. 10)
5	0623-184	2	Washer	12	8471-616	2	Screw, Cap
6	0406-169	4	Bushing, Fuel Tank Mount	13	0417-001	4	Pad, Fuel Tank
7	0406-170	2	Collar, Fuel Tank Mount				

World of Powersports.com
800-407-7218

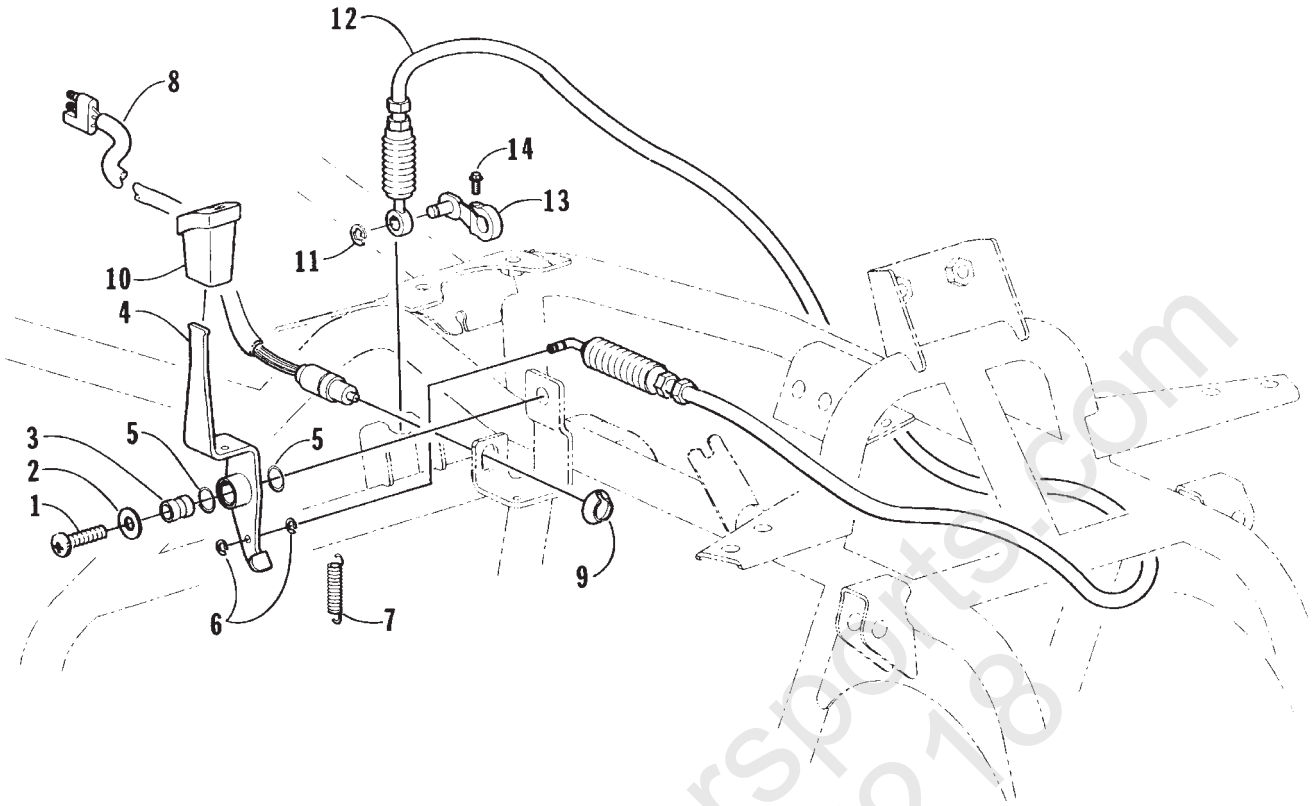

REVERSE SHIFT LEVER ASSEMBLY

0732-334

Ref.	Part No.	Qty.	Description	Ref.	Part No.	Qty.	Description
1	8477-830	1	Screw, Cap	8	0409-008	1	Reverse Switch
2	8050-252	1	Washer	9	0402-130	1	Retainer, Switch
3	0402-103	1	Axle, Reverse Shifter	10	0402-062	1	Knob, Reverse Shift Lever
4	0502-022	1	Lever, Reverse	11	3423-168	1	E-Ring
5	0423-069	2	O-Ring	12	0487-003	1	Cable, Shift
6	0423-063	2	E-Ring	13	3446-005	1	Arm, Reverse Gear Shift
7	0402-136	1	Spring, Reverse Lever	14	8408-616	1	Screw, Cap

World of Powersports.com
800-467-7218

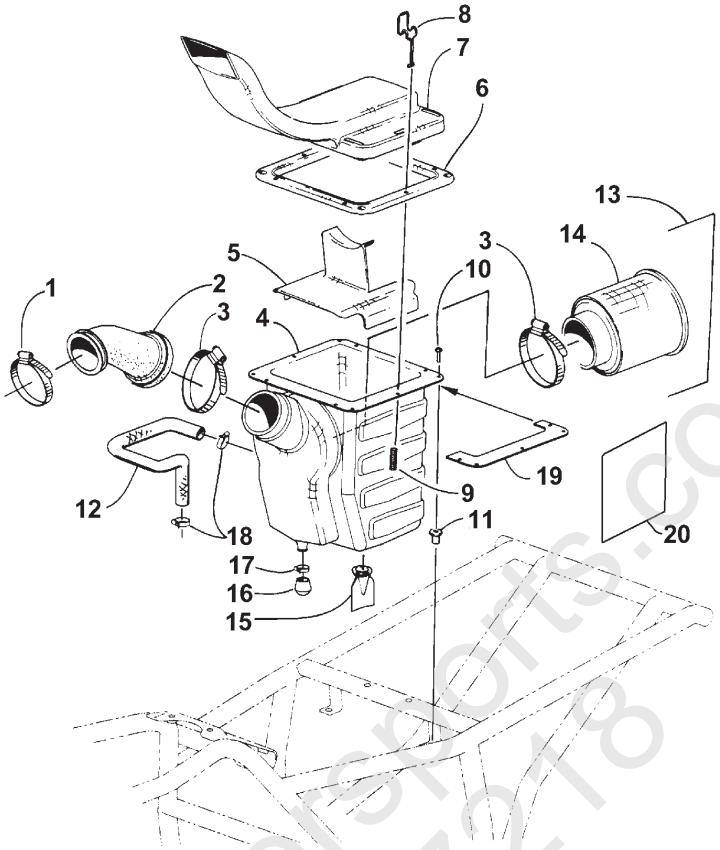

AIR INTAKE ASSEMBLY

0735-757 * Not Illustrated

Ref.	Part No.	Qty.	Description	Ref.	Part No.	Qty.	Description
1	0423-066	1	Clamp	11	0123-010	4	Nut, Expansion
2	0470-305	1	Boot, Air Cleaner	12	0410-004	1	Hose, Crankcase Vent
3	0423-018	2	Clamp	13	0470-322	4	Filter, Air Cleaner (inc. 14)
4	0570-004	1	Cleaner, Air - Lower Assembly	14	0470-332	2	• Sleeve, Filter
5	0470-328	1	Baffle, Splash - Air Cleaner	15	0470-309	1	Valve, Air Cleaner
6	0470-324	1	Gasket, Air Cleaner	16	0470-310	1	Cap, Drain - Air Cleaner
7	0470-304	1	Snorkel, Air Cleaner	17	0423-047	1	Clamp, Hose
8	0470-307	6	Clamp, Air Cleaner	18	0423-045	2	Clamp, Hose - Spring
9	0423-037	6	Spring, Air Cleaner	19	0470-327	2	Support, Air Cleaner Flange
10	0123-549	4	Screw, Machine	20	0706-990	AR	Tape, Foil (6 in. x 24 in.) *

Worldwide Powersports.com 800-407-7218

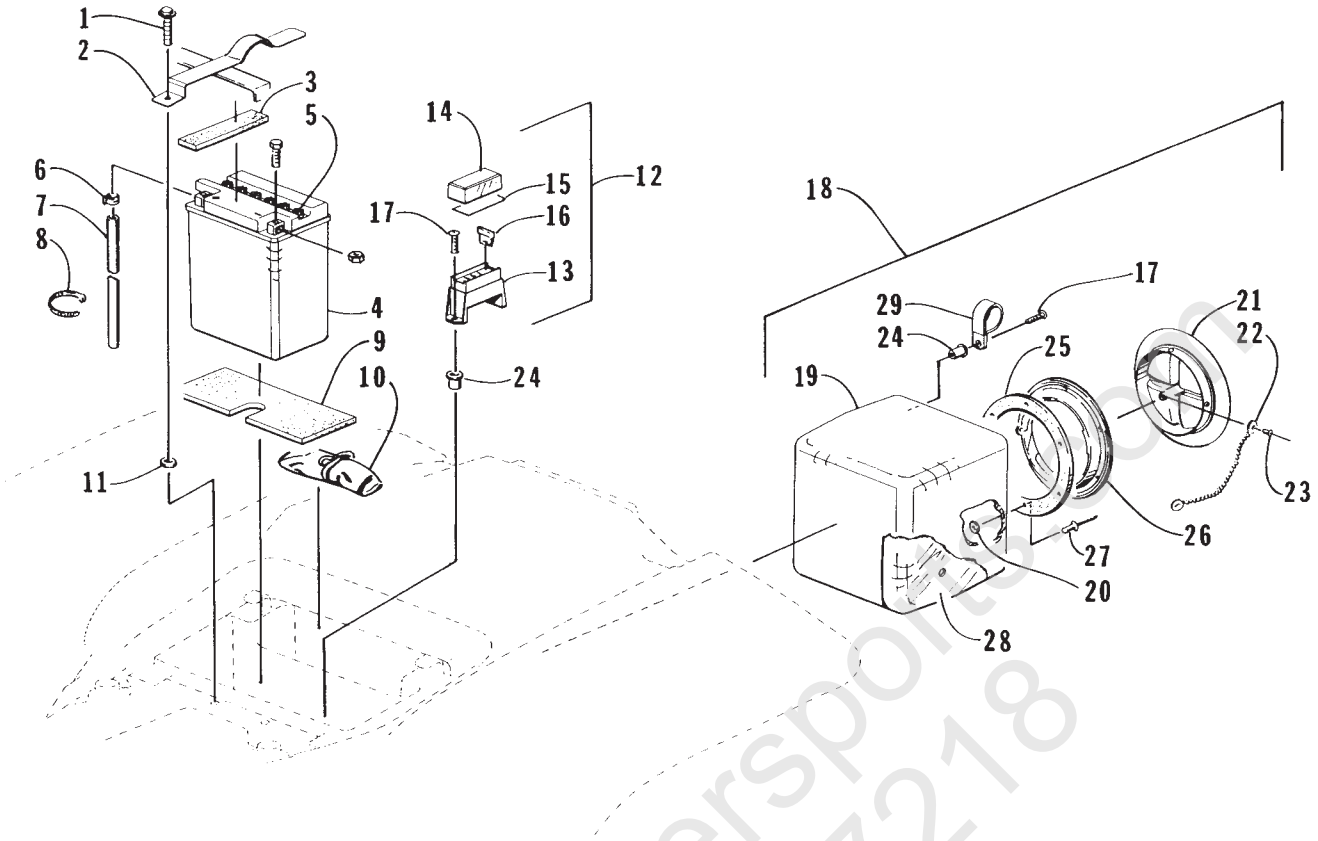

STORAGE BOX AND BATTERY ASSEMBLY

0732-347 * Not a Service Part

Ref.	Part No.	Qty.	Description
1	8408-616	1	Screw, Cap
2	0406-242	1	Strap, Battery
3	0406-252	2	Pad, Battery - Upper
4	0445-005	1	Battery - Assembly (inc. 5-7)
5	0645-045	6	• Cap, Battery
6	0645-152	1	• Clamp, Hose
7	0645-179	1	• Hose, Battery Vent
8	0123-788	AR	Tie, Cable
9	0406-227	1	Pad, Battery - Lower
10	0444-001	1	Kit, Tool
11	0423-052	1	Collar, Body
12	0530-001	1	Fuse Box - Assembly (inc. 13-16)
13	*	*	• Block, Fuse *
14	*	*	• Lid, Fuse Block *
15	0430-006	1	• Decal, Fuse Block
16	0630-057	3	• Fuse, 10AMP
	0630-058	2	• Fuse, 15AMP
17	0623-121	6	Screw, Machine
18	0506-102	1	Storage Box - Assembly (inc. 19-23 and four No. 24 and 25-27)
19	0406-257	1	• Box, Tool
20	8050-152	6	Washer
21	0406-208	1	• Lid, Tool Box
22	0773-401	1	• Chain, Storage
23	0623-620	2	• Rivet
24	0123-010	6	• Nut, Expansion
25	0673-973	1	• Seal, Storage Cover
26	0406-205	1	• Ring, Mounting - Storage Box Lid
27	8060-630	6	• Rivet
28	0706-990	AR	Tape, Foil
29	0423-044	4	Clamp, Tube

World of Powersports.com
800-407-7218

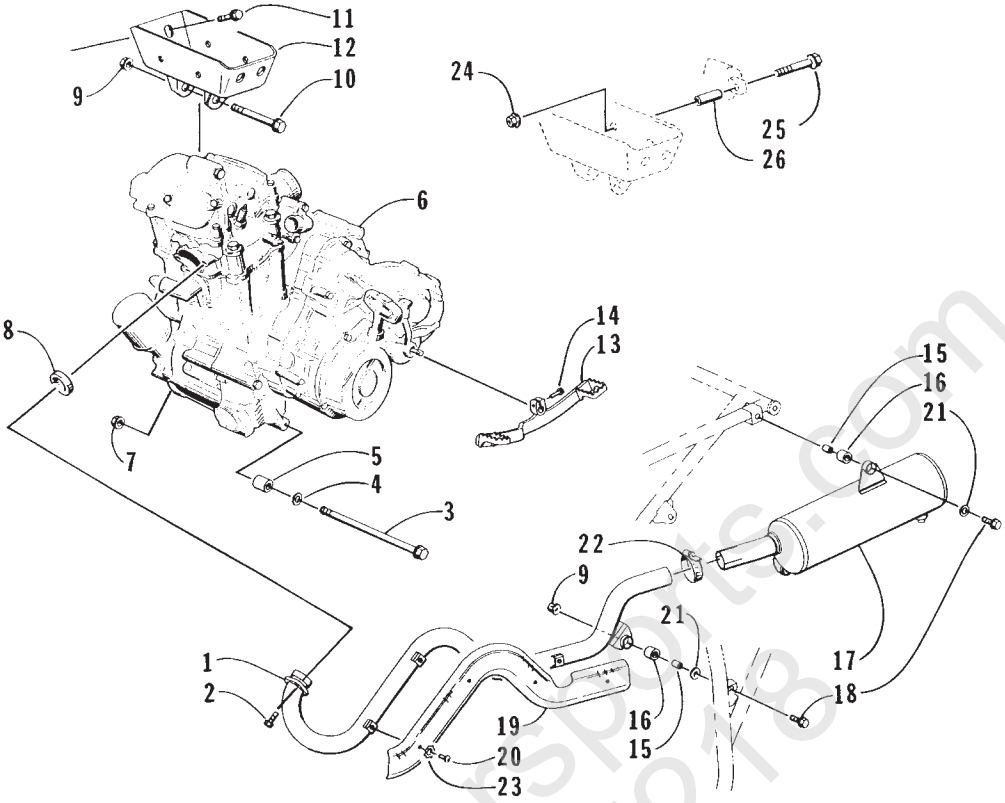

ENGINE AND EXHAUST

0732-348

Ref.	Part No.	Qty.	Description	Ref.	Part No.	Qty.	Description
1	0512-001	1	Pipe, Exhaust	14	8408-620	1	Screw, Cap
2	8408-820	2	Screw, Cap	15	0412-003	3	Spacer, Exhaust
3	3423-003	3	Screw, Cap	16	0412-004	3	Bushing, Rubber
4	0423-050	3	Washer, Motor	17	0412-005	1	Muffler
5	0423-042	1	Spacer, Engine	18	8408-830	3	Screw, Cap
6	0462-001	1	Engine	19	0406-224	1	Cover, Exhaust
7	8478-002	3	Nut, Lock	20	8477-610	4	Screw, Machine
8	0412-007	1	Seal, Exhaust	21	8050-252	3	Washer
9	8474-813	1	Nut, Jam	22	0214-015	1	Clamp
10	8408-860	1	Screw, Cap	23	8053-211	4	Washer, Star
11	8409-020	4	Screw, Cap	24	8424-602	2	Nut
12	0506-083	1	Bracket, Upper Motor	25	8408-640	2	Screw, Cap
13	0502-016	1	Lever, Shift	26	0107-630	2	Spacer

World of Powersports.com 800-407-7218

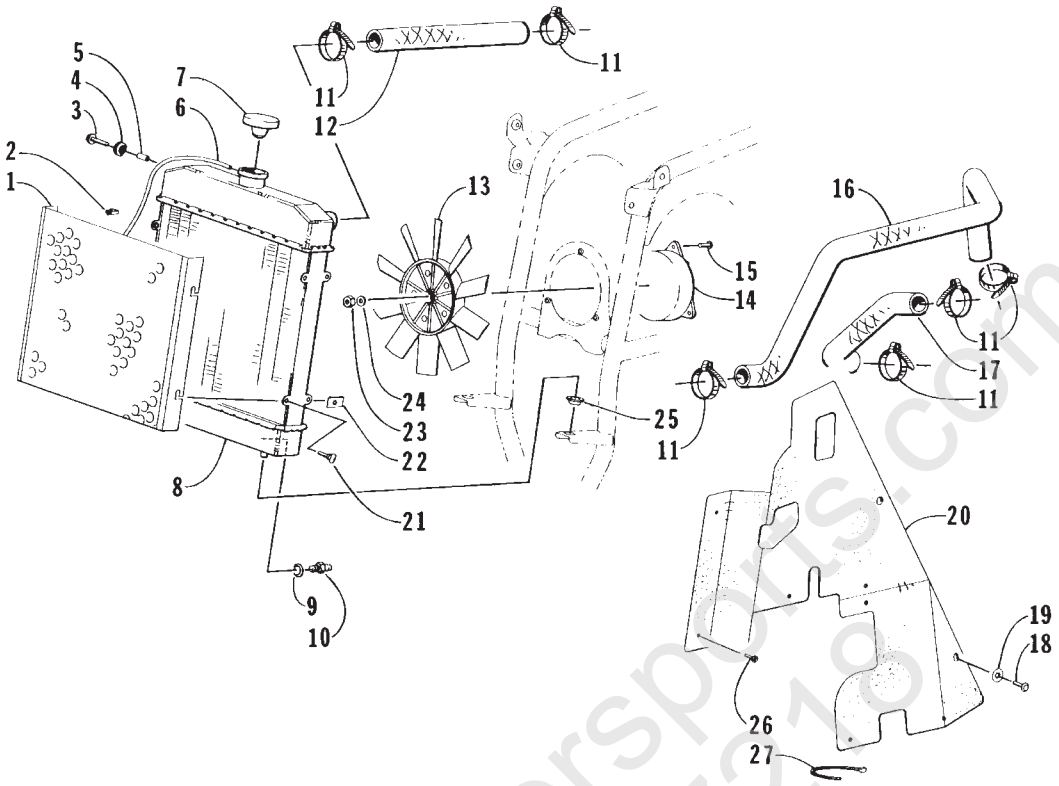

COOLING ASSEMBLY

0732-349

Ref.	Part No.	Qty.	Description	Ref.	Part No.	Qty.	Description
1	0413-007	1	Screen, Radiator	15	8474-516	3	Screw, Machine
2	3002-964	2	Clamp, Wire	16	0410-001	1	Hose, Coolant - Lower
3	8408-620	2	Screw, Cap	17	0410-003	1	Hose, Coolant - Crossover
4	0423-030	2	Grommet	18	8474-616	8	Screw, Machine
5	0423-036	2	Collar	19	0423-010	8	Washer, Shoulder
6	0610-016	AR	Hose - 25 ft	20	0406-200	2	Panel, Fender - Inner
7	0413-002	1	Cap, Radiator	21	0413-009	4	Screw, Thumb
8	0413-001	1	Radiator - Assembly (inc. 1, 4, 9-10 and 21)	22	0423-031	4	Nut, Speed
9	0423-062	1	• O-Ring	23	0423-056	1	Nut, Jam - Left
10	0430-001	1	• Switch, Temperature Sensor	24	8050-252	1	Washer
11	0214-015	6	Clamp, Hose	25	0423-028	2	Bushing, Stem
12	0410-002	1	Hose, Coolant - Upper	26	8477-616	4	Screw, Machine
13	0413-006	1	Blade, Fan	27	0123-788	8	Tie, Cable
14	0413-004	1	Motor, Fan				

World of Powersports.com 800-487-7218

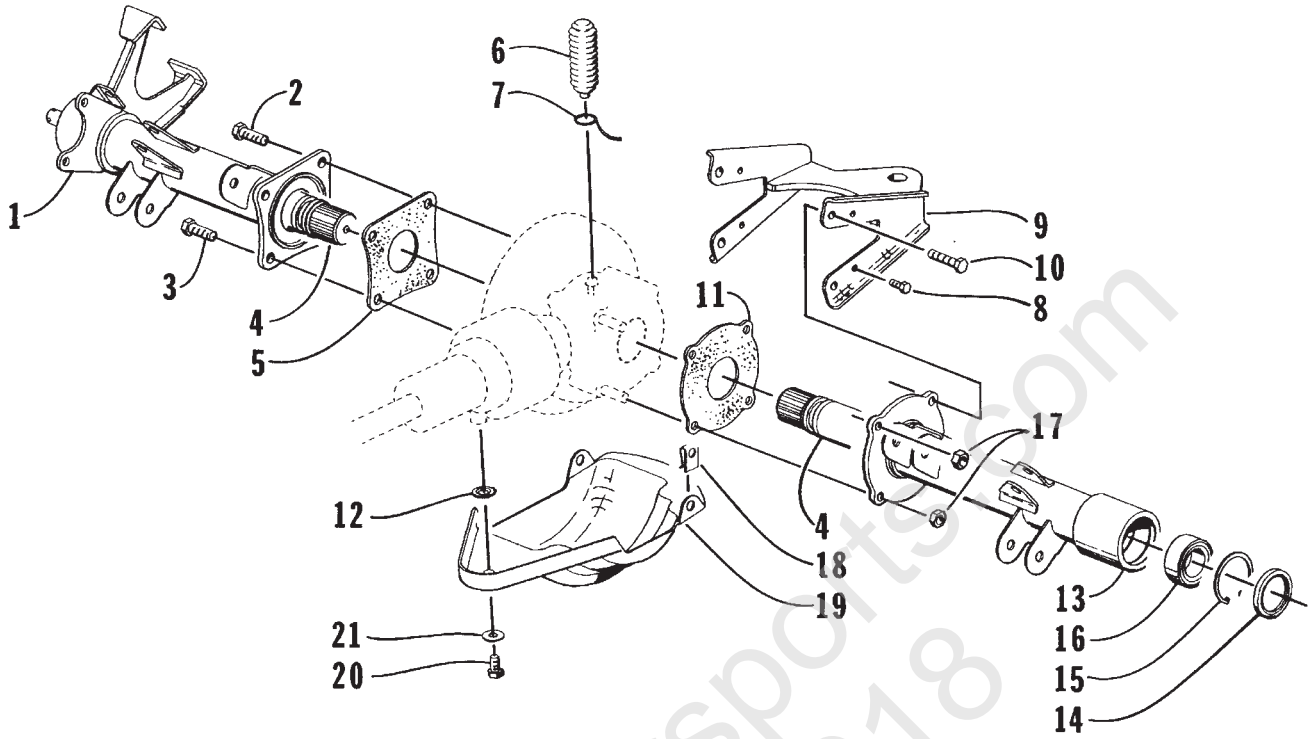

REAR AXLE ASSEMBLY

0732-350

Ref.	Part No.	Qty.	Description	Ref.	Part No.	Qty.	Description
1	0502-018	1	Housing, Axle - Rear Right	12	0423-010	1	Washer, Shoulder
2	8409-030	2	Screw, Cap	13	0502-005	1	Housing, Axle - Rear Left
3	8409-025	1	Screw, Cap	14	0402-068	2	Seal
4	0402-145	2	Axle - Rear	15	0423-033	2	C-Clip
5	0402-139	1	Gasket - Rear Axle	16	0402-003	2	Bearing, Wheel Hub - Rear
6	3008-100	1	Bladder, Case	17	8474-813	2	Nut, Jam
7	0123-811	1	Tie, Cable	18	0423-031	2	Nut, Speed
8	8408-616	2	Screw, Cap	19	0406-097	1	Panel, Gear Case - Rear
9	0506-135	1	Hitch, Trailer	20	8408-820	1	Screw, Cap
10	8408-840	2	Screw, Cap	21	8050-252	1	Washer
11	0402-138	1	Gasket - Rear Axle				

World Of Powersports.com
800-407-7218

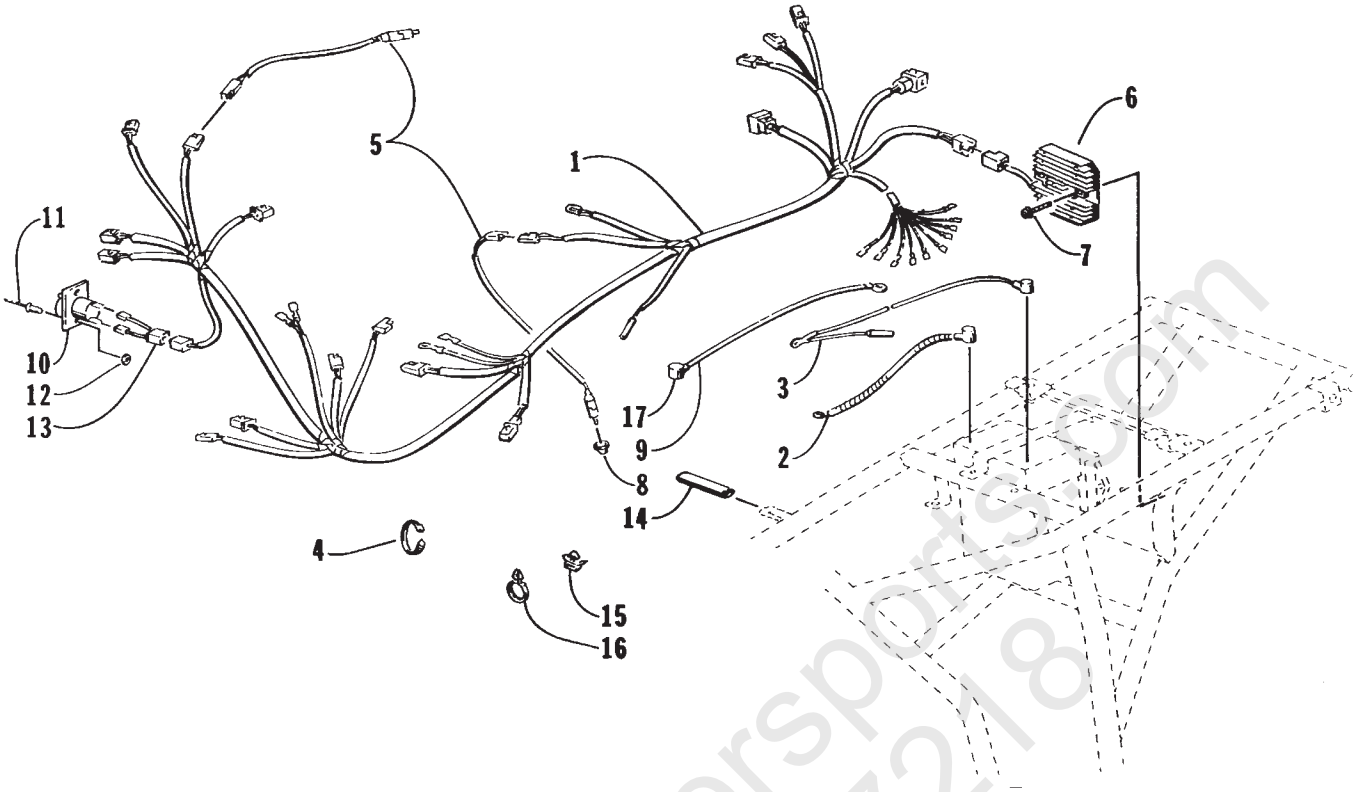

WIRING HARNESS ASSEMBLY

0733-409

Ref.	Part No.	Qty.	Description	Ref.	Part No.	Qty.	Description
1	0486-001	1	Harness, Main	10	0445-001	4	Receptacle, 12V
2	0445-003	1	Cable, Battery/Electric Start Relay	11	8060-430	2	Rivet
3	0445-002	1	Cable, Battery/Ground	12	0123-149	2	Washer
4	0123-788	AR	Tie, Cable	13	0486-004	1	Harness, 12V Receptacle
5	0409-009	1	Switch, Brake - Assembly	14	0406-266	1	Sleeve, Cable Clip
6	0530-002	1	Regulator, Voltage	15	0423-065	1	Base, Wire Tie
7	8408-630	2	Screw, Cap	16	0423-075	1	Tie, Cable
8	0402-130	1	Retainer, Switch	17	0645-019	1	Boot, Terminal
9	0445-004	1	Cable, Battery/Electric Start				

World of Powersports.com
800-467-7218

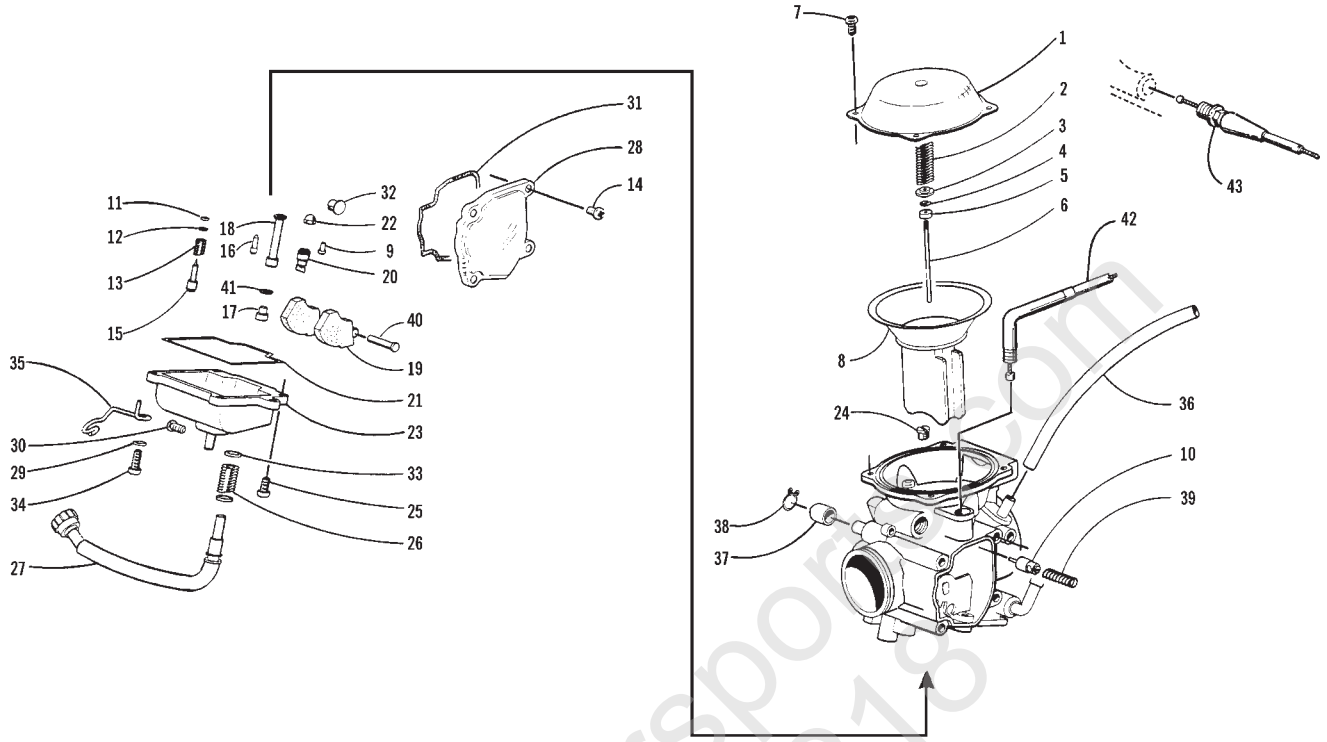

CARBURETOR

(Complete Assembly p/n 0470-317)

0732-351

Ref.	Part No.	Qty.	Description	Ref.	Part No.	Qty.	Description
1	4505-001	1	Cover - Assembly	23	4505-023	1	Chamber, Float
2	4505-002	2	Spring	24	4505-024	1	Jet, Pilot
3	4505-003	1	Ring	25	4505-025	5	Screw
4	4505-004	1	E-Ring	26	4505-026	1	Spring
5	4505-005	1	Ring	27	4505-027	1	Cable Adjust - Assembly
6	4505-020	1	Jet Needle 5D40-4	28	4505-028	1	Cover
7	4505-007	4	Screw	29	4505-029	1	Washer
8	4505-103	1	Diaphram	30	4505-030	1	Screw
9	4505-009	1	Screw	31	4505-031	1	O-Ring
10	4505-010	1	Plunger - Assembly	32	4505-032	1	Guide, Cable
11	4505-011	1	O-Ring	33	4505-033	2	Washer
12	4505-012	1	Washer	34	4505-042	1	Screw
13	4505-013	1	Spring	35	4505-043	1	Clip
14	4505-014	4	Screw	36	4505-035	2	Hose
15	4505-016	1	Screw, Pilot	37	4505-036	1	Cap
16	4505-017	1	Jet, Pilot 40	38	4505-037	1	Clip
17	4505-091	1	Jet, Main 132.5	39	4505-039	1	Spring
18	4505-020	1	Needle Jet P-7	40	6505-153	1	Pin
19	4505-021	1	Float - Assembly	41	6505-006	1	Washer
20	4505-022	1	Seat, Valve 2.0 (With Needle)	42	0487-001	1	Cable, Throttle
21	4505-044	1	O-Ring, Bowl	43	0487-002	1	Cable, Choke
22	4505-045	1	Filter				

Parts of Powersports.com
800-407-7218

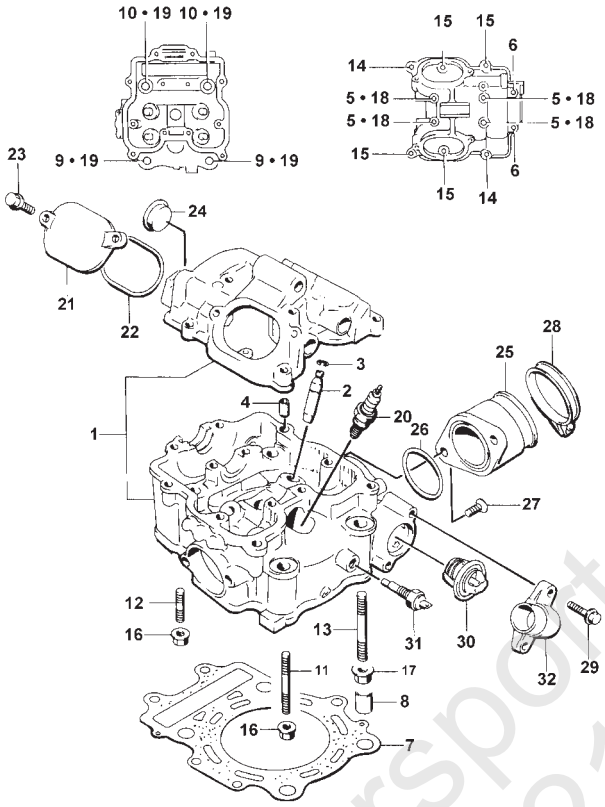

CYLINDER HEAD ASSEMBLY

(Complete Gasket Set p/n 3402-107)

0732-300 * Not Illustrated

Ref.	Part No.	Qty.	Description	Ref.	Part No.	Qty.	Description
1	3402-098	1	Head, Cylinder - Assembly (inc. 2-6)	18	3003-290	4	Gasket
2	3402-099	4	• Guide, Valve	19	3402-010	4	Gasket, Head Nut
3	3423-068	4	• Circlip	20	0217-705	1	Spark Plug (NGK CR8E)
4	3423-043	2	• Pin	21	3402-100	2	Cap, Inspection
5	3423-006	4	• Bolt	22	3402-101	2	O-Ring
6	3008-376	2	• Bolt	23	3004-341	4	Bolt
7	3402-163	1	Gasket, Cylinder Head	24	3402-035	1	Plug, Cylinder Head
8	3423-088	2	Pin	25	3402-149	1	Pipe, Intake - Assembly (inc. 26)
9	3423-015	2	Bolt	26	3423-062	1	• O-Ring
10	3423-016	2	Bolt	27	3423-019	2	Screw, Cap
11	3423-089	2	Bolt, Cylinder Head Stud	28	3402-086	1	Clamp
12	3423-087	2	Bolt, Cylinder Head Stud	29	3004-341	2	Bolt
13	3004-492	1	Bolt, Stud	30	3413-005	1	Thermostat
14	3423-007	2	Bolt	31	3530-005	1	Switch, Water Temp - Assembly
15	3004-376	4	Bolt	32	3413-004	1	Cover, Thermostat
16	3004-488	4	Nut	33	3402-048	1	Plug, Frost*
17	3004-326	1	Nut				

World of Powersports.com
800-427-7218

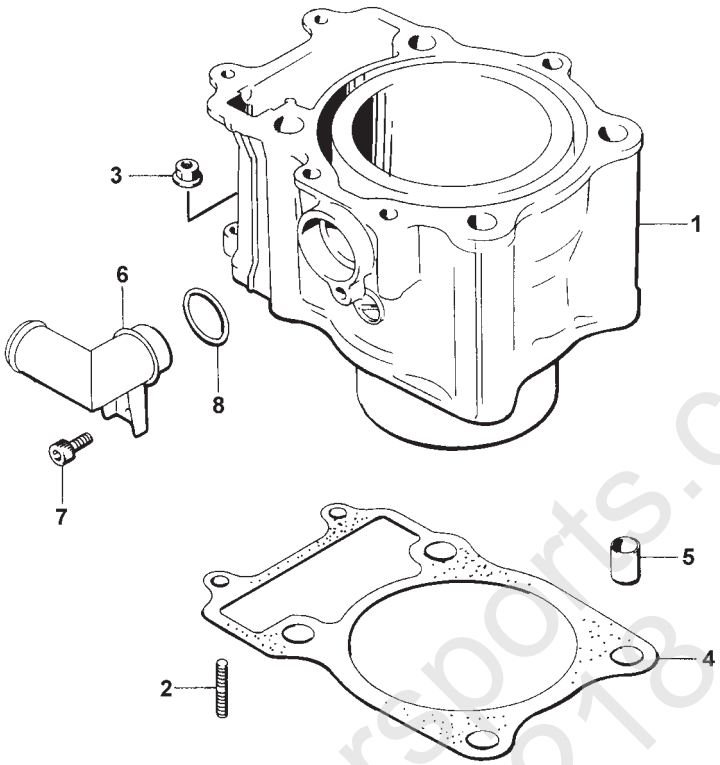

CYLINDER ASSEMBLY

0732-301

Ref.	Part No.	Qty.	Description	Ref.	Part No.	Qty.	Description
1	3402-102	1	Cylinder	5	3423-088	2	Pin
2	3423-090	2	Bolt, Stud	6	3413-006	1	Union, Water Hose
3	3004-488	2	Nut	7	3423-121	1	Bolt
4	3402-103	1	Gasket, Cylinder	8	3423-058	1	O-Ring

World of Powersports.com
800-407-7218

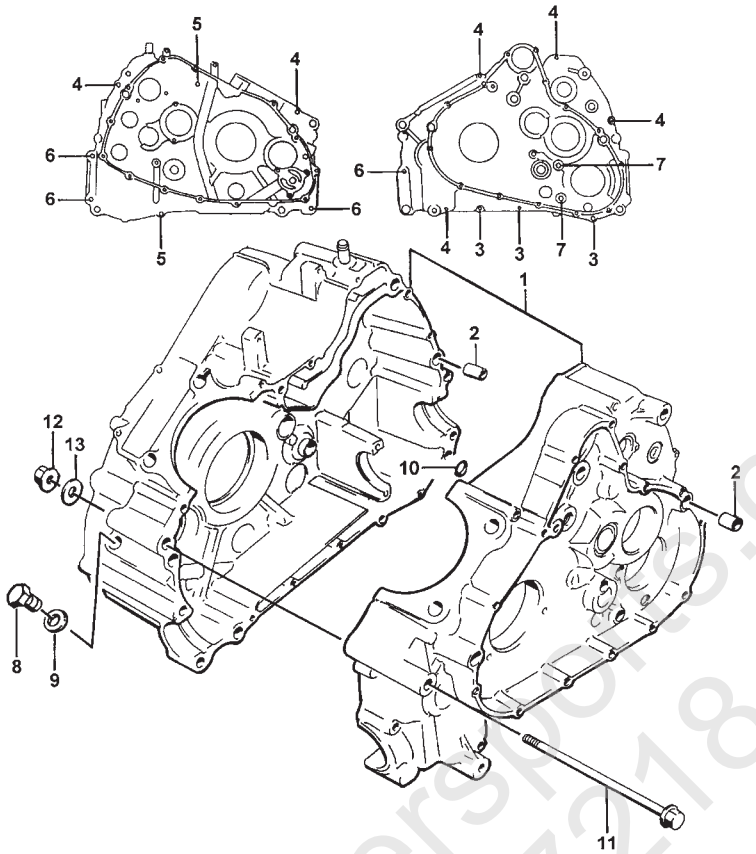

CRANKCASE ASSEMBLY

0732-302

Ref.	Part No.	Qty.	Description	Ref.	Part No.	Qty.	Description
1	3402-104	1	Crankcase Set	8	3423-095	1	Plug, Oil Gallery
2	3423-088	4	• Pin	9	3402-011	1	Gasket
3	3423-091	3	• Bolt	10	3423-052	1	O-Ring
4	3423-092	6	• Bolt	11	3423-009	3	Bolt
5	3423-094	2	• Bolt	12	3423-024	3	Nut
6	0693-303	4	• Bolt	13	3004-278	3	Washer
7	3423-093	2	• Bolt				

World of Powersports.com
800-467-7218

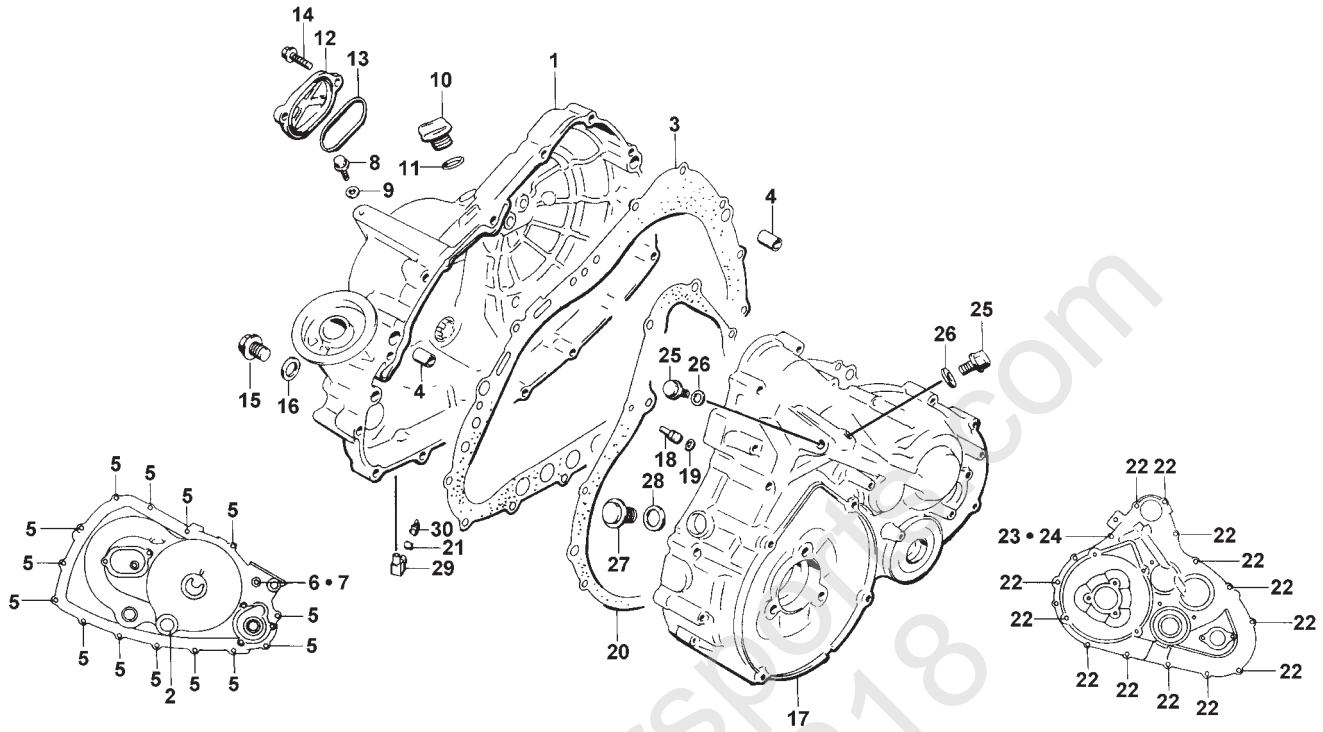

CRANKCASE COVER ASSEMBLY

0732-303

Ref.	Part No.	Qty.	Description	Ref.	Part No.	Qty.	Description
1	3402-199	1	Cover, Clutch (inc. 2)	16	3402-012	1	Gasket
2	3402-112	1	• Lens, Oil Inspection	17	3402-106	1	Cover Set, Transfer (inc. 18-19)
3	3402-108	1	Gasket	18	3402-097	1	• Jet, Oil Mission
4	3423-088	2	Pin	19	3423-051	1	• O-Ring
5	0693-327	14	Bolt	20	3402-109	1	Gasket
6	3423-097	1	Bolt	21	3423-120	1	Clip
7	3003-290	1	Gasket	22	3423-098	13	Bolt
8	3004-339	1	Plug, Oil Gallery	23	3423-092	1	Bolt
9	3402-009	1	Gasket	24	3003-290	1	Gasket
10	3402-042	1	Cap, Engine Oil Filler	25	3004-705	2	Plug, Oil Gallery
11	3423-055	1	O-Ring	26	3003-188	2	Gasket
12	3402-100	1	Cap, Inspection	27	3402-038	1	Plug
13	3402-101	1	O-Ring	28	3402-013	1	Gasket
14	3423-096	2	Screw, Cap	29	3413-009	1	Union, Water Drain
15	3402-037	1	Plug, Oil Pressure	30	3413-008	1	Hose

World of Powersports.com
800-407-7218

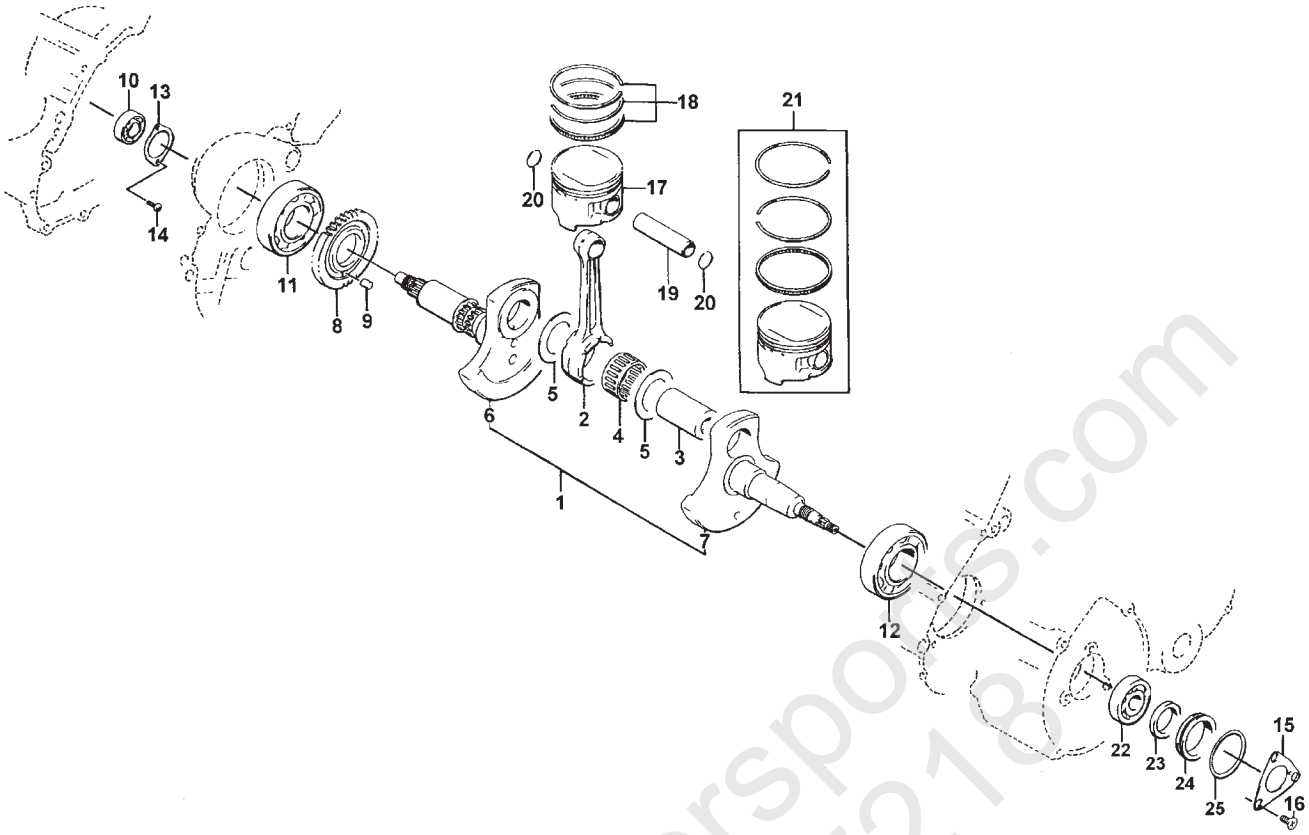

CRANKSHAFT ASSEMBLY

0732-304 * Not Illustrated

Ref.	Part No.	Qty.	Description	Ref.	Part No.	Qty.	Description
1	3402-115	1	Crankshaft - Assembly (inc. 2-7)	16	3423-018	3	Screw, Cap
2	3402-111	1	• Rod, Connecting	17	3402-113	1	Piston
3	3402-116	1	• Pin, Crank	18	3402-114	1	Ring Set, Piston
4	3402-064	1	• Bearing		3436-007	1	Ring Set (+0.5 mm)
5	3423-030	2	• Washer		3436-008	1	Ring Set (+1.0 mm)
6	3402-117	1	• Crankshaft - Right	19	3402-110	1	Pin
7	3402-118	1	• Crankshaft - Left	20	3423-069	2	Circlip
8	3402-127	1	Gear, Balancer Drive	21	3402-189	1	Piston Set (+0.5 mm)
9	3423-048	1	Pin		3402-190	1	Piston Set (+1.0 mm)
10	3402-044	1	Bearing - Right	22	3402-051	1	Bearing
11	3402-058	1	Bearing - Center	23	3402-070	1	Seal, Oil
12	3402-054	1	Bearing - Left	24	3402-119	1	Spacer
13	3402-120	1	Retainer, Bearing - Right	25	3423-063	1	O-Ring
14	3423-017	2	Screw, Cap	26	3436-007	1	Ring Set (OS:0.5 mm) *
15	3402-188	1	Retainer, Oil Seal - Left	27	3436-008	1	Ring Set (OS:1.0 mm) *

World of Powersports.com 800-447-7218

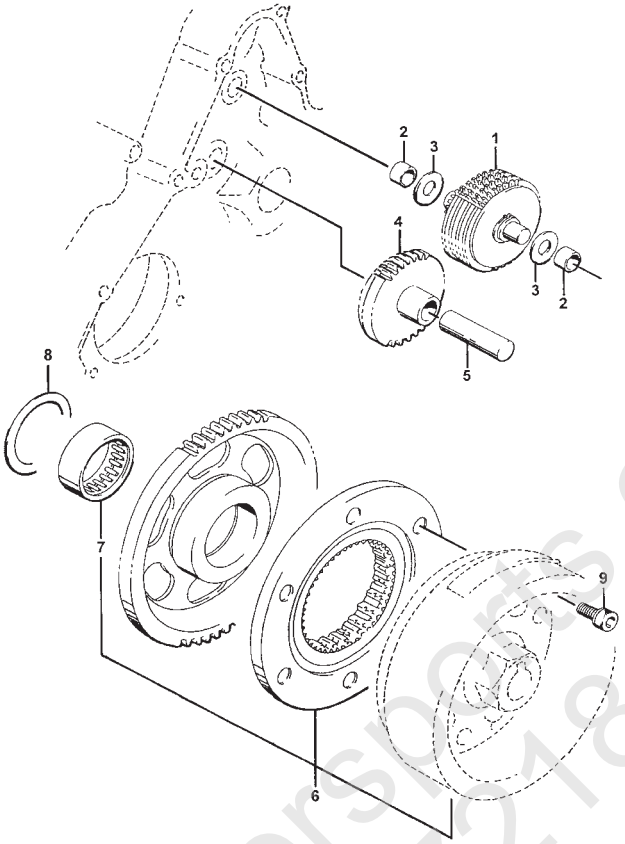

STARTER CLUTCH ASSEMBLY

0732-305

Ref.	Part No.	Qty.	Description	Ref.	Part No.	Qty.	Description
1	3402-123	1	Limiter, Idle Gear - Assembly	6	3402-122	1	Clutch, Starter - Set (inc. 7)
2	3402-125	2	Bushing	7	3402-063	1	• Bearing
3	3423-103	2	Washer	8	3423-104	1	Washer
4	3402-124	1	Gear, Starter Idle	9	3423-102	6	Bolt
5	3423-042	1	Pin				

World of Powersports.com
800-407-7218

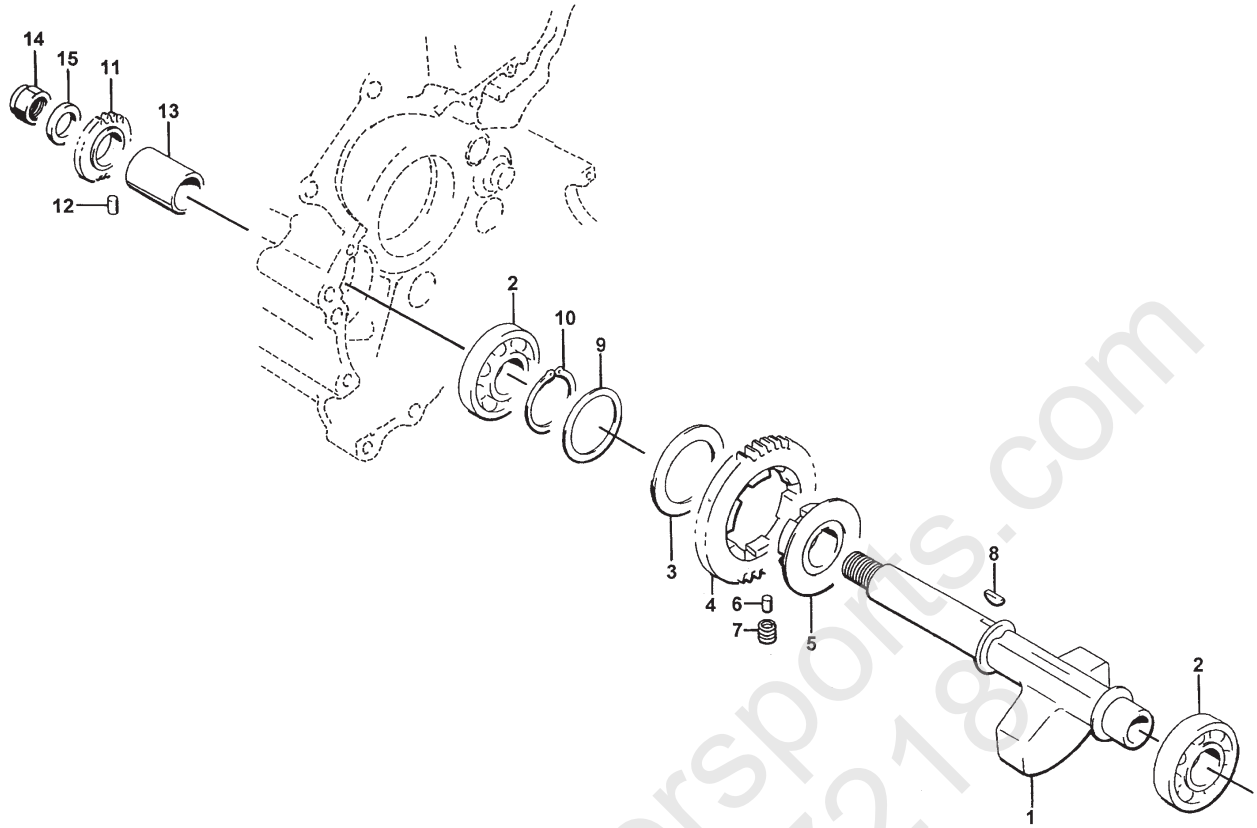

CRANK BALANCER ASSEMBLY

0732-306

Ref.	Part No.	Qty.	Description	Ref.	Part No.	Qty.	Description
1	3402-126	1	Balancer, Crank	9	3423-107	1	Washer
2	3402-050	2	Bearing	10	3423-200	1	Circlip
3	3423-033	1	Washer	11	3402-150	1	Gear, Oil Pump Drive
4	3402-128	1	Gear, Driven	12	3423-114	1	Pin
5	3402-129	1	Race, Driven Gear Inner	13	3402-151	1	Spacer
6	3423-041	3	Pin	14	3423-025	1	Nut
7	3402-090	6	Spring	15	3423-029	1	Washer
8	3004-540	1	Key				

World of Powersports.com
800-487-7218

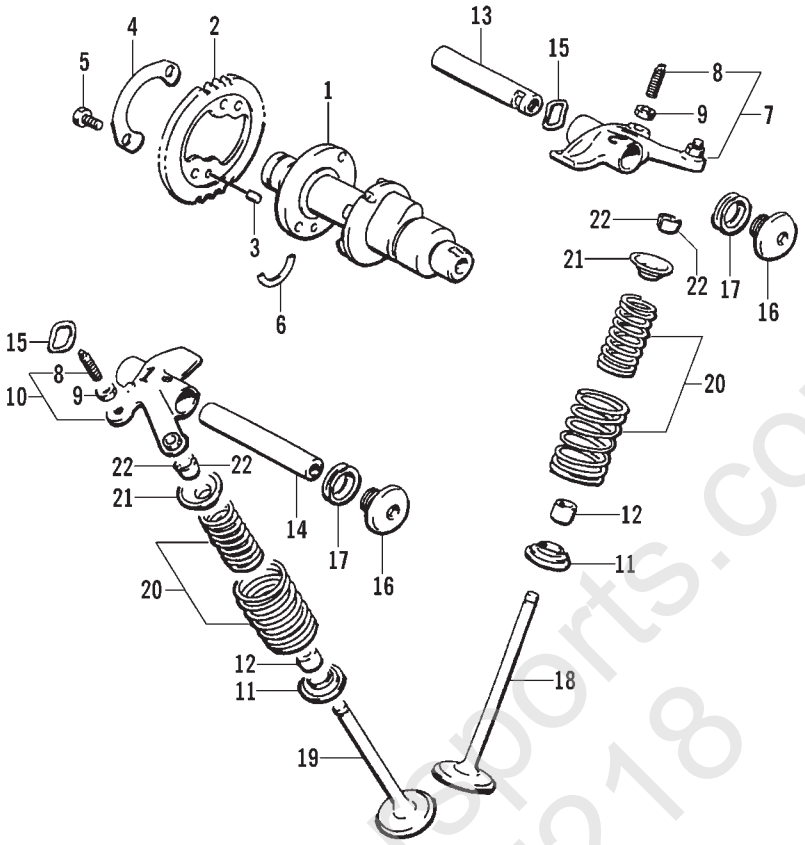

CAM SHAFT VALVE ASSEMBLY

0732-307

Ref.	Part No.	Qty.	Description	Ref.	Part No.	Qty.	Description
1	3402-130	1	Cam Shaft	12	3402-078	4	Seal, Oil
2	3402-131	1	Sprocket	13	3402-140	1	Shaft, Rocker Arm
3	3423-047	1	Pin	14	3402-141	1	Shaft, Rocker Arm
4	3423-073	1	Washer	15	3423-031	2	Washer
5	3423-013	2	Bolt	16	3402-040	2	Plug, Shaft
6	3423-071	1	C-Ring	17	3402-012	2	Gasket
7	3402-138	1	Arm, Valve Rocker (inc. 8-9)	18	3402-142	2	Valve, Intake
8	3423-075	2	• Screw, Cap	19	3402-143	2	Valve, Exhaust
9	3423-076	2	• Nut	20	3402-144	4	Spring, Valve - Set
10	3402-139	1	Arm, Valve Rocker (inc. 8-9)	21	3402-146	4	Retainer, Spring
11	3402-148	4	Seat, Spring	22	3402-147	8	Cotter, Valve

World of Powersports.com
800-407-7218

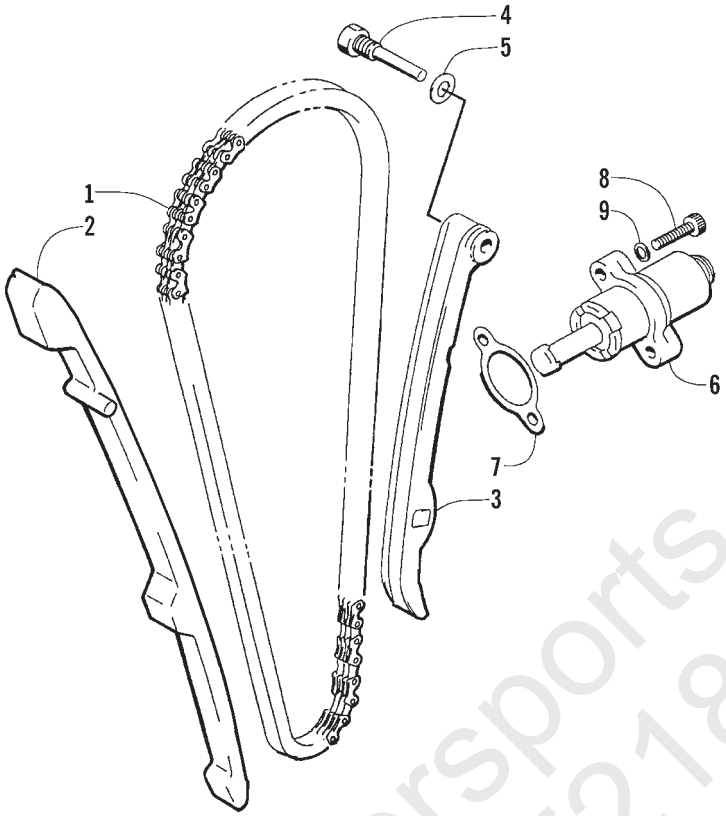

CAM CHAIN ASSEMBLY

0732-308

Ref.	Part No.	Qty.	Description	Ref.	Part No.	Qty.	Description
1	3402-133	1	Chain, Cam	6	3402-136	1	Adjuster, Tensioner - Assembly
2	3402-134	1	Guide, Chain	7	3402-137	1	Gasket
3	3402-135	1	Tensioner, Chain	8	3004-475	2	Bolt
4	3423-074	1	Bolt	9	3003-290	2	Gasket
5	3003-188	1	Washer				

World of Powersports.com
800-497-7218

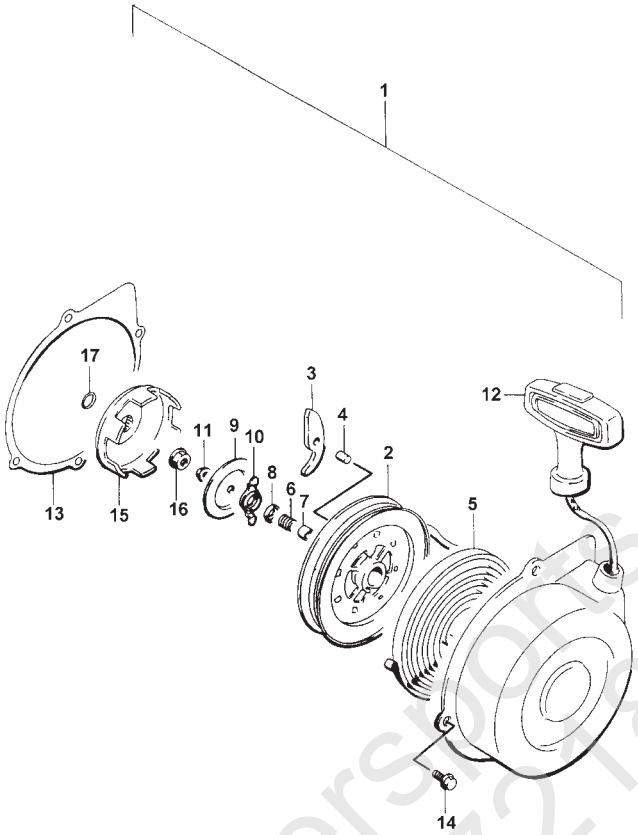

RECOIL STARTER ASSEMBLY

0732-309

Ref.	Part No.	Qty.	Description	Ref.	Part No.	Qty.	Description
1	3445-003	1	Starter, Recoil - Assembly (inc. 2-12)	10	3445-006	1	• Guide, Ratchet
2	3445-004	1	• Reel	11	3004-488	1	• Nut
3	3445-005	1	• Ratchet	12	3445-011	1	• Rope - Assembly
4	3445-014	1	• Pin, Ratchet	13	3445-013	1	Gasket
5	3445-007	1	• Spring, Spiral	14	3423-112	6	Bolt
6	3445-009	1	• Spring, Friction	15	3445-015	1	Cup, Starter
7	3445-010	1	• Shaft	16	3004-491	1	Nut
8	3445-012	1	• Cover, Spring	17	3423-053	1	O-Ring
9	3445-008	1	• Plate, Friction				

World of Powersports.com
800-407-7218

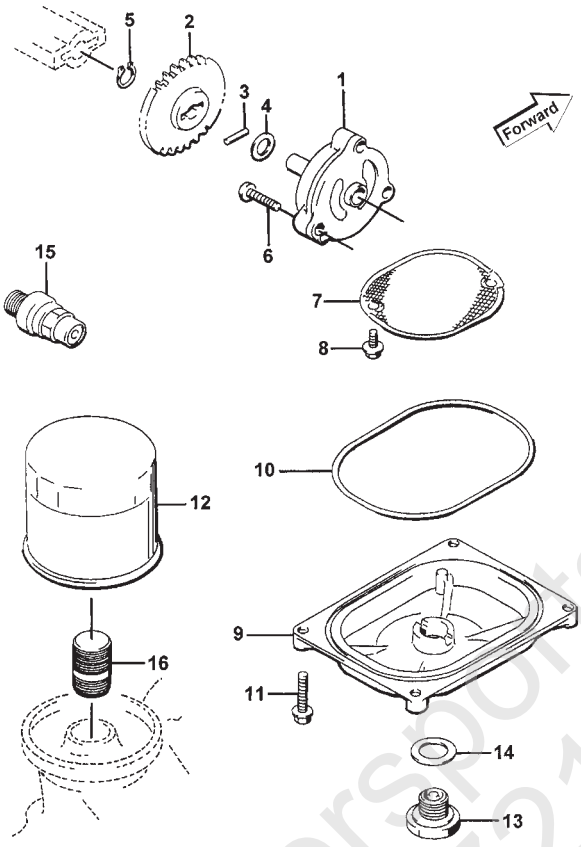

OIL FILTER/PUMP ASSEMBLY

0732-310

Ref.	Part No.	Qty.	Description	Ref.	Part No.	Qty.	Description
1	3402-153	1	Pump, Engine Oil	9	3402-157	1	Cap, Oil Strainer
2	3402-152	1	Gear, Driven	10	3423-077	1	O-Ring
3	3423-046	1	Pin	11	3004-756	4	Bolt
4	3423-115	1	Washer	12	3402-155	1	Filter, Engine Oil
5	3423-184	1	Circlip	13	3402-036	1	Plug, Drain
6	3423-113	3	Screw, Cap	14	3402-012	1	Gasket
7	3402-156	1	Strainer, Engine Oil	15	3402-154	1	Valve, Oil Relief - Assembly
8	3423-118	2	Screw, Cap	16	3402-158	1	Union, Oil Filter

World of Powersports.com
800-467-7218

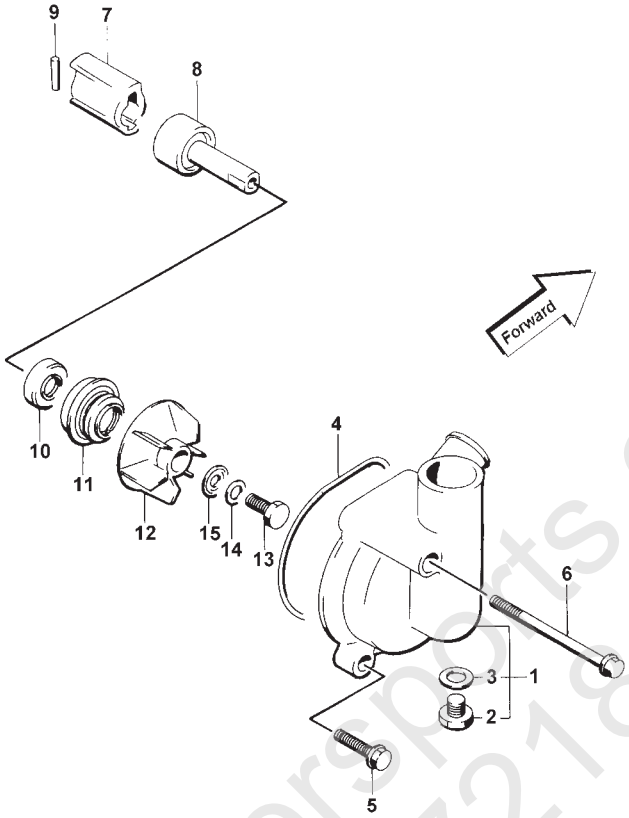

WATER PUMP ASSEMBLY

0732-311

Ref.	Part No.	Qty.	Description	Ref.	Part No.	Qty.	Description
1	3402-159	1	Case, Water Pump (inc. 2-3)	9	3423-046	1	Pin
2	3423-185	1	• Bolt	10	3003-356	1	Seal, Pump Drive
3	3003-188	1	• Gasket	11	3003-466	1	Seal, Mechanical
4	3423-078	1	O-Ring	12	3413-001	1	Impeller
5	3004-507	2	Bolt	13	3003-426	1	Bolt
6	3423-119	1	Bolt	14	3003-431	1	Washer
7	3413-003	1	Joint, Pump Drive	15	3003-432	1	Gasket
8	3413-002	1	Shaft, Water Pump w/Bearing				

World of Powersports.com
800-407-7218

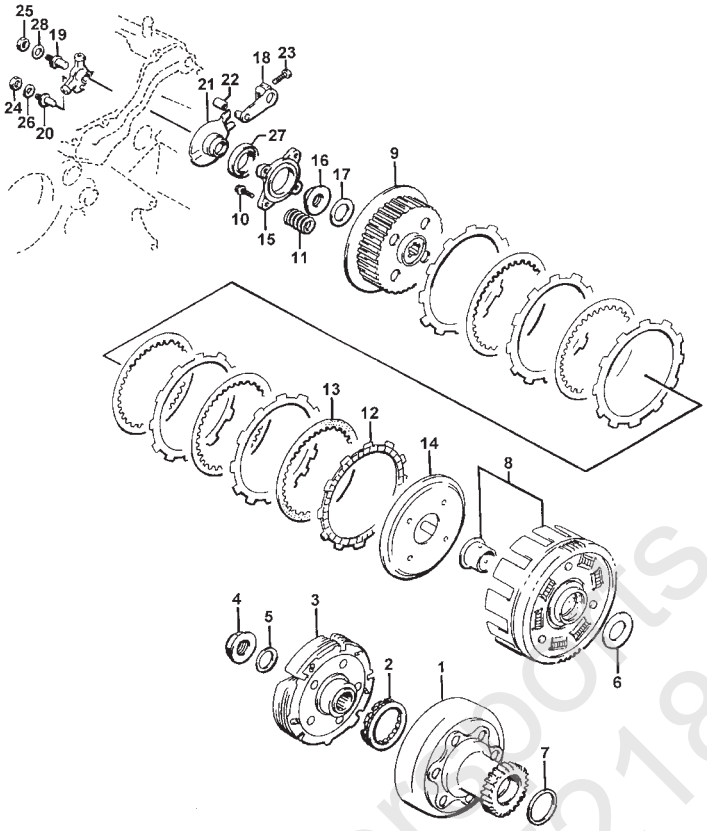

CLUTCH ASSEMBLY

0732-312

Ref.	Part No.	Qty.	Description	Ref.	Part No.	Qty.	Description
1	3446-001	1	Housing, Starter Clutch	15	3446-009	1	Plate, Clutch Release
2	3446-003	1	Clutch, Primary Drive One Way	16	3423-080	1	Nut, Clutch Sleeve Hub
3	3446-010	1	Shoe, Starter Clutch	17	3423-032	1	Washer, Sleeve Hub
4	3423-081	1	Nut, Starter Clutch Shoe	18	3446-011	1	Arm, Clutch Release
5	3423-032	1	Washer, Starter Shoe	19	3423-082	1	Bolt, Clutch (No. 1)
6	3423-122	1	Washer, Primary Driven	20	3423-083	2	Bolt, Clutch (No. 2)
7	3423-186	1	Washer, Primary Driven	21	3446-012	1	Guide, Release Roller
8	3446-002	1	Gear, Primary Driven - Assembly	22	3446-013	1	Roller, Clutch Release - Assembly
9	3446-004	1	Hub, Clutch Sleeve	23	3423-125	1	Bolt, Clutch Release Arm
10	3423-079	4	Bolt, Clutch Spring	24	3008-014	1	Nut, Clutch Release (No. 2)
11	3446-005	4	Spring, Clutch	25	3423-022	1	Nut, Clutch Release (No. 1)
12	3446-006	6	Plate, Clutch Drive	26	3423-027	1	Washer, Clutch (No.2)
13	3446-007	5	Plate, Clutch Driven	27	3402-186	1	Bearing, Clutch
14	3446-008	1	Disk, Clutch Pressure	28	3004-366	1	Washer, Clutch (No. 1)

www.Powersports.com 800-427-7218

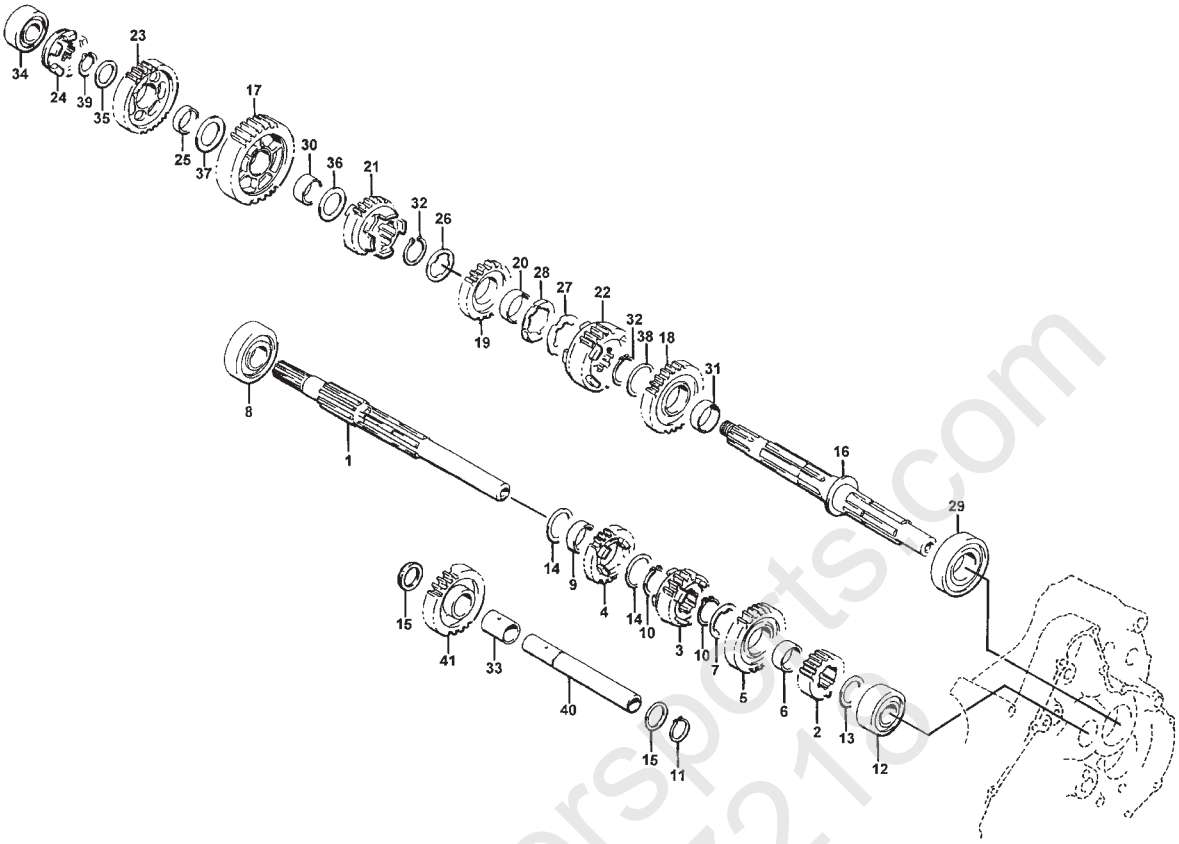

TRANSMISSION ASSEMBLY

0732-313

Ref.	Part No.	Qty.	Description	Ref.	Part No.	Qty.	Description
1	3446-014	1	Shaft, Counter	22	3446-026	1	Gear, 5th Driven
2	3446-016	1	Gear, 2nd Drive	23	3446-029	1	Gear, Reverse Driven
3	3446-017	1	Gear, 3rd Drive	24	3446-030	1	Dog, Reverse
4	3446-018	1	Gear, 4th Drive	25	3446-032	1	Bushing, Reverse Driven
5	3446-019	1	Gear, 5th Drive	26	3423-038	1	Washer, 3rd Driven - Right
6	3446-020	1	Bushing, 5th Drive Gear	27	3423-039	1	Washer, 3rd Driven - Left
7	3423-037	1	Washer, 5th Drive Gear	28	3423-040	1	Washer, 3rd Driven - Left
8	3402-049	1	Bearing, Center Shaft - Right	29	3402-053	1	Bearing, Driveshaft
9	3402-081	1	Bushing, 4th Drive Gear	30	3402-080	1	Bushing, 1st Driven
10	3423-066	2	Circlip, 4th Drive	31	3402-082	1	Bushing, 2nd Driven
11	3423-190	1	Circlip, Reverse Idle	32	3423-188	2	Circlip, 2nd Driven
12	3402-179	1	Bearing, Center Shaft	33	3402-079	1	Bushing, Reverse Idle
13	3423-126	1	Washer, 2nd Drive	34	3003-320	1	Bearing, Driveshaft - Right
14	3423-187	2	Washer, 4th Drive	35	3423-129	1	Washer, Reverse Driven
15	3423-126	2	Washer, Reverse Idle	36	3423-130	1	Washer, 1st Driven - Left
16	3446-015	1	Shaft, Drive	37	3423-131	1	Washer, 1st Driven - Right
17	3446-021	1	Gear, 1st Driven	38	3003-605	1	Washer, 2nd Driven
18	3446-022	1	Gear, 2nd Driven	39	3423-189	1	Circlip, Reverse Driven
19	3446-023	1	Gear, 3rd Driven	40	3446-027	1	Shaft, Reverse Idle
20	3446-024	1	Bushing, 3rd Driven	41	3446-028	1	Gear, Reverse Idle
21	3446-025	1	Gear, 4th Driven				

Powersports.com
800-407-7216

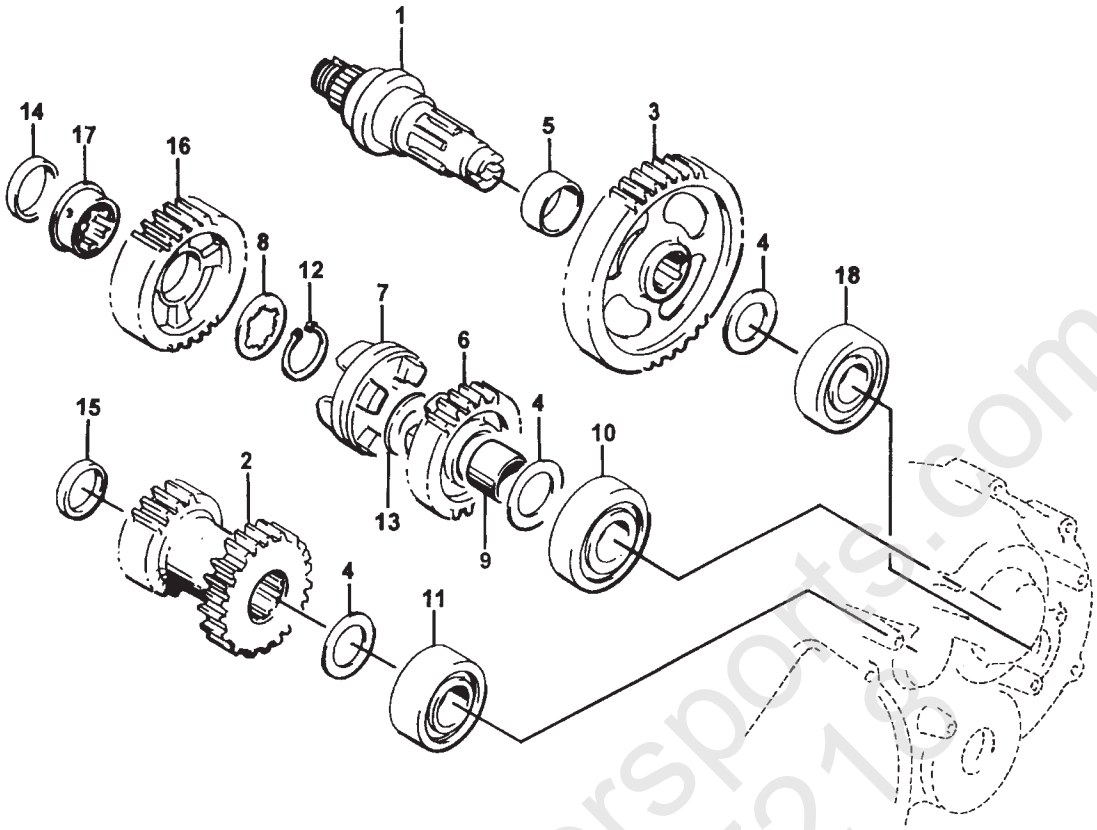

SECONDARY TRANSMISSION ASSEMBLY

0732-314

Ref.	Part No.	Qty.	Description	Ref.	Part No.	Qty.	Description
1	3446-065	1	Shaft, Output	10	3402-046	1	Bearing, Driveshaft - Left
2	3446-066	1	Gear, Idle	11	3402-047	1	Bearing, Center Shaft - Left
3	3446-072	1	Gear, Driven	12	3423-066	1	Circlip, (No. 1)
4	3423-150	3	Washer	13	3423-202	1	Washer, Gear (No. 2)
5	3402-015	1	Spacer	14	3446-068	1	Spacer
6	3446-070	1	Gear, (No. 2)	15	3423-148	1	Spacer, Idle Gear
7	3446-108	1	Dog, Select Sliding	16	3446-067	1	Gear, (No. 1)
8	3423-036	1	Washer, (No. 1)	17	3446-259	1	Spacer, Drive
9	3446-103	1	Bushing	18	3402-045	1	Bearing Set - Left

World of Powersports.com
800-467-7218

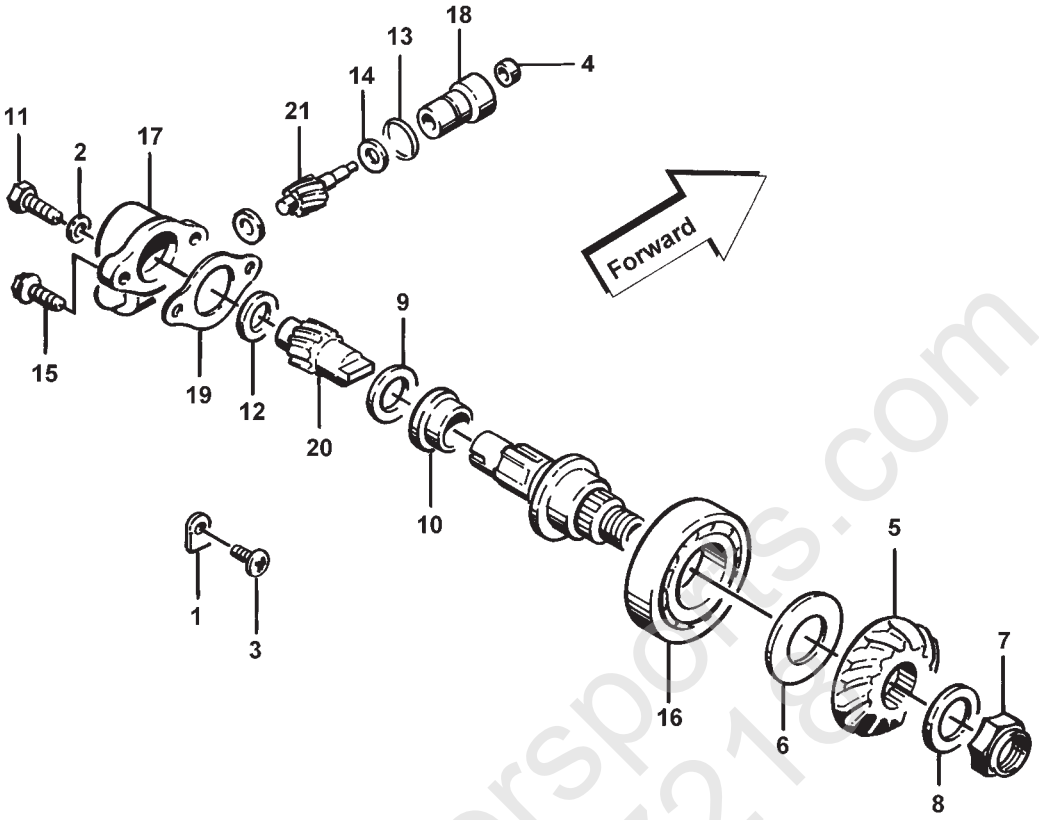

SPEEDOMETER DRIVE ASSEMBLY

0732-459

Ref.	Part No.	Qty.	Description	Ref.	Part No.	Qty.	Description
1	3446-031	2	Retainer, Bearing	12	3423-145	1	Washer
2	3402-009	1	Washer, Driven	13	3423-056	1	O-Ring
3	3004-552	2	Screw, Retainer	14	3423-144	1	Washer
4	3402-077	1	Seal, Driven Gear	15	3004-507	2	Bolt, Gear
5	3446-033	1	Gear	16	3402-055	1	Bearing Set - Right
6	3446-035	1	Shim Set	17	3446-057	1	Housing, Odometer Gear
7	3423-023	1	Nut	18	3446-058	1	• Sleeve
8	3423-032	1	Washer	19	3446-059	1	• Gasket
9	3423-146	1	Washer - Right	20	3446-060	1	• Gear, Drive
10	3446-062	1	Spacer, Driven Gear	21	3446-061	1	• Gear, Driven
11	3423-143	1	Bolt, Gear				

World of Powersports.com
800-407-7218

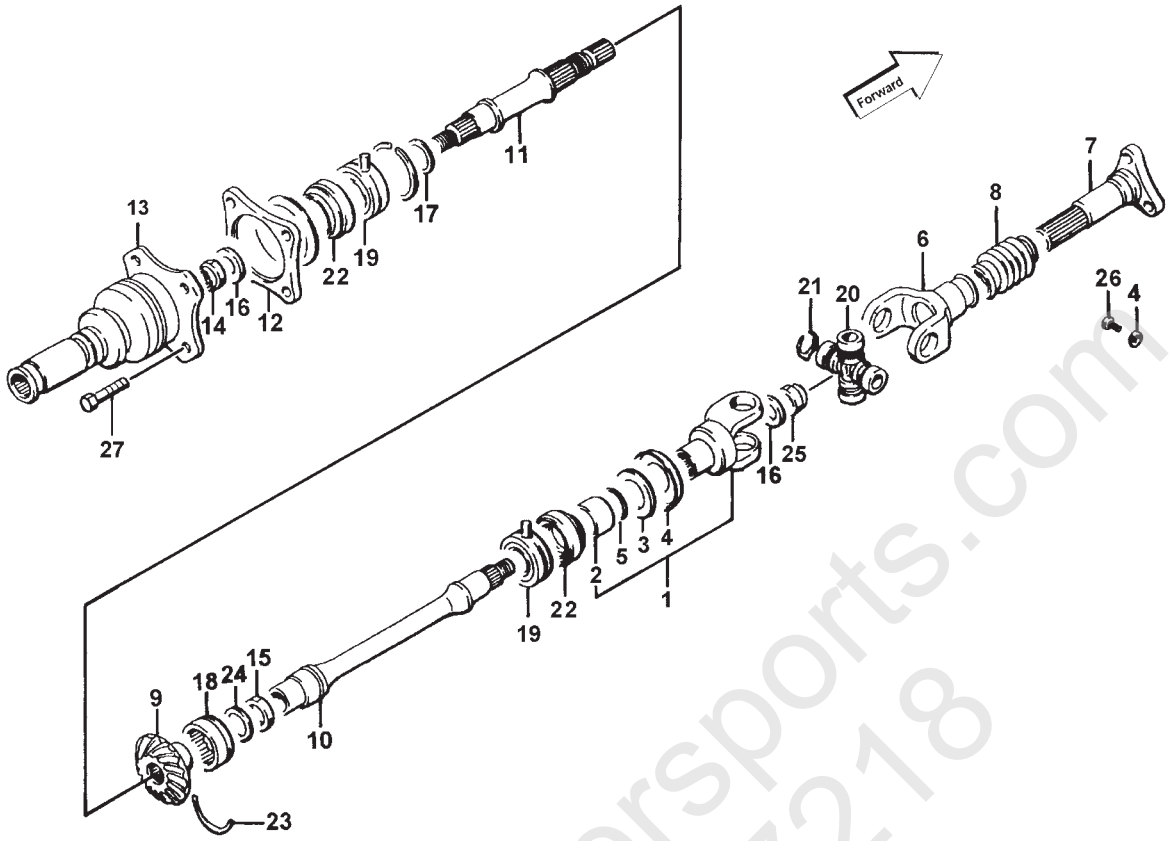

SECONDARY DRIVE ASSEMBLY

0732-315

Ref.	Part No.	Qty.	Description
1	3435-001	1	Yoke, Drive Output (inc. 2-5)
2	3435-029	1	• Collar, Yoke
3	3435-030	1	• Plate, Yoke Collar
4	3423-035	1	• Plate, Yoke Collar
5	3423-060	1	• O-Ring, Yoke Collar
6	3435-002	1	Yoke, Joint
7	3435-004	1	Shaft, Propeller
8	3435-005	1	Boot, Propeller Shaft
9	3446-034	1	Gear
10	3446-036	1	Shaft - Front
11	3446-037	1	Shaft - Rear
12	3435-003	1	Flange, Output Joint
13	3435-010	1	Joint Assembly, Rear Output
14	3423-026	1	Nut, Rear Output Joint
15	3423-136	1	Nut
16	3423-028	2	Washer, Rear Output Flange
17	3402-017	1	Shim - 0.60 mm
	3402-018	1	Shim - 0.65 mm
	3402-019	1	Shim - 0.70 mm
	3402-020	1	Shim - 0.75 mm
	3402-021	1	Shim - 0.80 mm
	3402-022	1	Shim - 0.85 mm
	3402-023	1	Shim - 0.90 mm
	3402-024	1	Shim - 0.95 mm
	3402-025	1	Shim - 1.00 mm
	3402-028	1	Shim - 1.05 mm
	3402-029	1	Shim - 1.10 mm
	3402-030	1	Shim - 1.15 mm
	3402-031	1	Shim - 1.20 mm
18	3402-062	1	Bearing w/Groove
19	3402-067	2	Bearing w/ Locating Ring and Pin
20	3435-011	1	Joint Set, Universal (inc. 21)
21	3423-067	4	• Circlip
22	3402-072	2	Seal, Oil
23	3423-072	1	Ring, Bearing
24	3423-137	1	Washer
25	3423-026	1	Nut, Yoke
26	3004-552	1	Screw, Cap

Yard of Powersports.com 800-427-7218

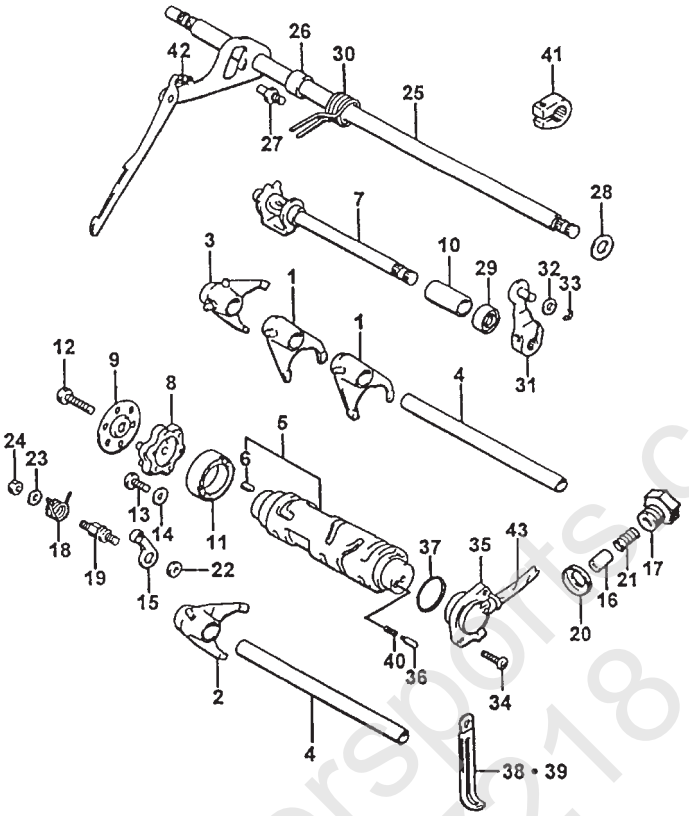

GEAR SHIFTING ASSEMBLY

0732-316 * Not Illustrated

Ref.	Part No.	Qty.	Description	Ref.	Part No.	Qty.	Description
1	3446-038	2	Fork, (No. 2)	22	3423-141	1	Washer, Gear Shift Cam
2	3446-039	1	Fork, (No. 3)	23	3423-142	1	Washer, Cam Stopper Arm
3	3446-040	1	Fork, Reverse	24	3004-488	1	Nut, Cam Stopper Arm Support
4	3446-052	2	Shaft, Gear Shift Fork	25	3446-053	1	Shaft, Gear Shift
5	3446-041	1	Cam, Gear Shift (inc. 6)	26	3446-054	1	Spacer, Gear Shift Shaft
6	3423-114	1	• Pin, Gear Shift	27	3446-056	1	Stopper, Gear Shift Arm
7	3446-042	1	Cam, Reverse Shift	28	3402-068	1	Seal, Gear Shift Shaft Oil
8	3446-049	1	Plate, Gear Shift Cam	29	3402-076	1	Seal, Reverse Shift Oil
9	3446-050	1	Guide, Gear Shift Cam Plate	30	3402-094	1	Spring, Gear Shift Return
10	3402-014	1	Spacer, Reverse Shift Cam	31	3446-055	1	Arm, Reverse Gear Shift
11	3402-051	1	Bearing, Gear Shift Cam	32	3004-366	1	Washer, Gear Shift Cable Arm
12	3004-376	1	Bolt, Gear Shift Cam Plate	33	3423-168	1	E Ring, Gear Shift Cable Arm
13	3004-552	2	Screw, Cam Bearing Retainer	34	3423-166	2	Screw, Cap
14	3423-135	2	Retainer, Bearing	35	3530-007	1	Base Assembly
15	3446-043	1	Stopper, Gear Shift Cam	36	3423-044	1	Contact, Neutral
16	3446-044	1	Stopper, Reverse Shift Cam	37	3423-059	1	O-Ring, Neutral
17	3446-046	1	Housing, Reverse Cam Stopper	38	3004-787	1	Clamp
18	3446-047	1	Spring, Shift Cam Stopper Arm	39	3004-761	1	Clamp
19	3446-048	1	Support, Shift Cam Stopper	40	3402-087	1	Spring
20	3402-012	1	Gasket, Cam Stopper Housing	41	3402-008	1	Hub, Gear Shift
21	3402-088	1	Spring, Reverse Cam Stopper	42	3411-001	1	Decal, Gear Shift Pattern *

Powersports.com 800-407-7218

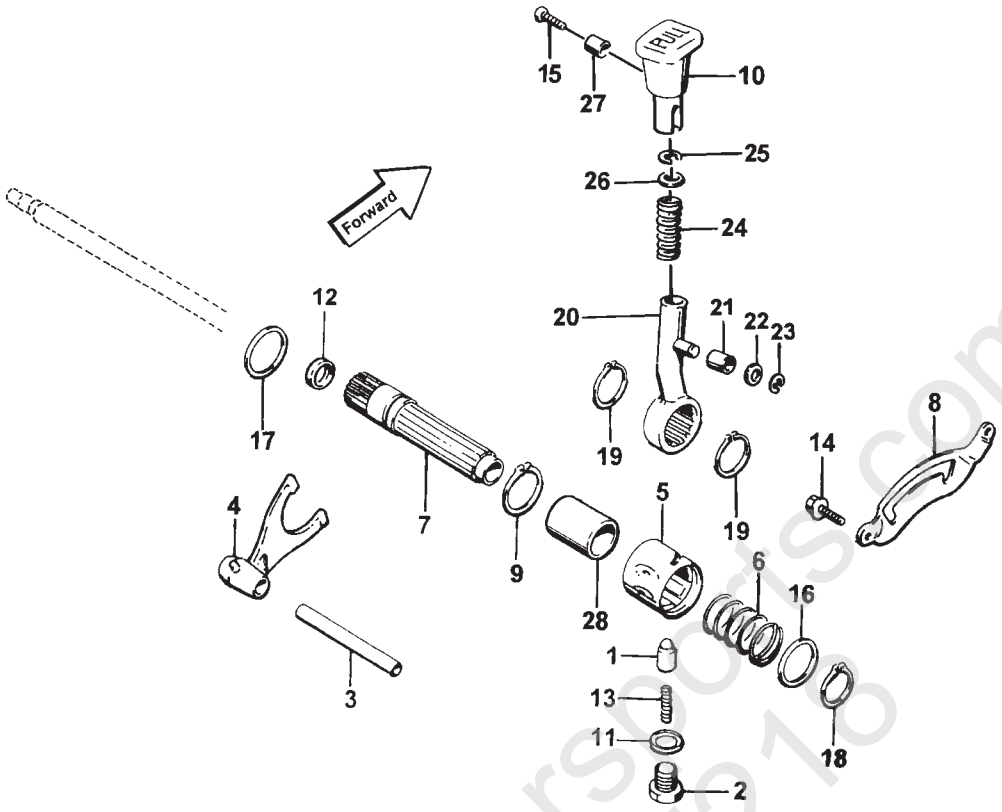

HIGH/LOW SHIFTER ASSEMBLY

0732-317

Ref.	Part No.	Qty.	Description	Ref.	Part No.	Qty.	Description
1	3446-045	1	Stopper, Driven Grear	15	3423-156	1	Screw, Shift Knob
2	3446-046	1	Housing, Shift Stop	16	3423-157	1	Washer, Cam Stop
3	3446-051	1	Shaft, Fork	17	3423-158	1	Washer, Shaft - Left
4	3446-073	1	Fork, Shift	18	3423-191	1	Circlip, Cam Spring
5	3446-074	1	Cam, Shift	19	3423-192	2	Circlip, Shift Lever
6	3446-075	2	Spring	20	3446-079	1	Lever, Shift - Assembly (inc. 21-26)
7	3446-076	1	Shaft, Shift	21	3446-106	1	• Collar
8	3446-077	1	Plate, Lever Stop	22	3423-152	1	• Washer
9	3423-193	1	Circlip, Shaft - Left	23	3423-153	1	• E-Clip
10	3446-078	1	Knob	24	3446-107	1	• Spring
11	3402-012	1	Gasket, Cam Stop	25	3423-154	1	• Circlip
12	3402-071	1	Seal, Oil	26	3423-155	1	• Washer
13	3402-089	1	Spring	27	3402-191	1	Spacer
14	3004-377	2	Bolt, Stopper Plate				

World of Powersports.com 800-487-7218

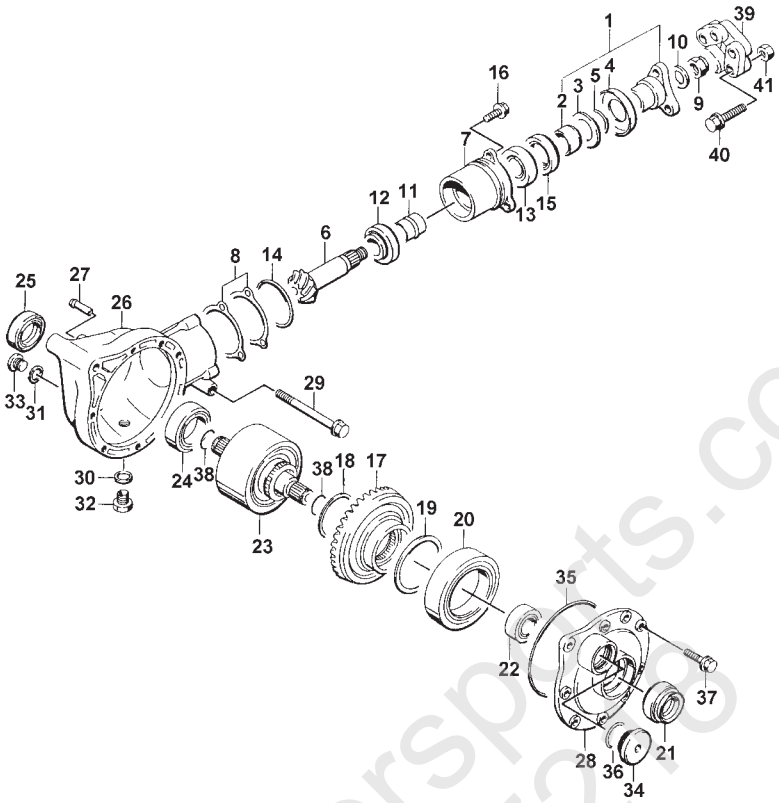

FRONT BEVEL GEAR ASSEMBLY

0732-318

Ref.	Part No.	Qty.	Description	Ref.	Part No.	Qty.	Description
1	3435-009	1	Flange, Gear (inc. 2-5)	22	3402-185	1	Bearing - Left
2	3435-029	1	• Collar, Gear	23	3435-013	1	Differential - Assembly
3	3435-030	1	• Plate, Oil Seal	24	3402-057	1	Bearing, Differential Case - Right
4	3423-034	1	• Plate, Gear	25	3402-072	1	Seal, Output Oil
5	3423-060	1	• O-Ring, Collar	26	3435-024	1	Housing (inc. 27)
6	3435-014	1	Gear, Bevel	27	3402-084	1	• Union, Breather
7	3435-021	1	Housing, Bevel Gear	28	3435-025	1	Case, Bearing
8	3435-022	1	Shim Set, Housing	29	3423-010	2	Bolt, Mounting
9	3423-026	1	Nut, Gear	30	3402-012	1	Gasket, Oil Drain Plug
10	3423-028	1	Washer, Bevel Gear	31	3402-013	1	Gasket, Oil Filler Plug
11	3402-016	1	Spacer, Bevel Gear	32	3402-036	1	Plug, Oil Drain
12	3402-066	1	Bearing	33	3402-041	1	Plug, Oil Filler
13	3402-065	1	Bearing	34	3423-183	1	Plug
14	3423-064	1	O-Ring	35	3423-050	1	O-Ring
15	3402-072	1	Seal, Joint	36	3423-061	1	O-Ring
16	3423-175	1	Bolt, Housing	37	3423-175	8	Bolt
17	3435-018	1	Gear	38	3423-070	2	Ring, Driveshaft - Front
18	3435-017	1	Shim Set	39	3435-007	1	Coupling, Propeller Shaft
19	3435-020	1	Shim Set	40	3423-182	6	Bolt
20	3402-059	1	Bearing	41	3004-491	6	Nut
21	3402-072	1	Seal - Left				

Official Powersports.com 800-407-7278

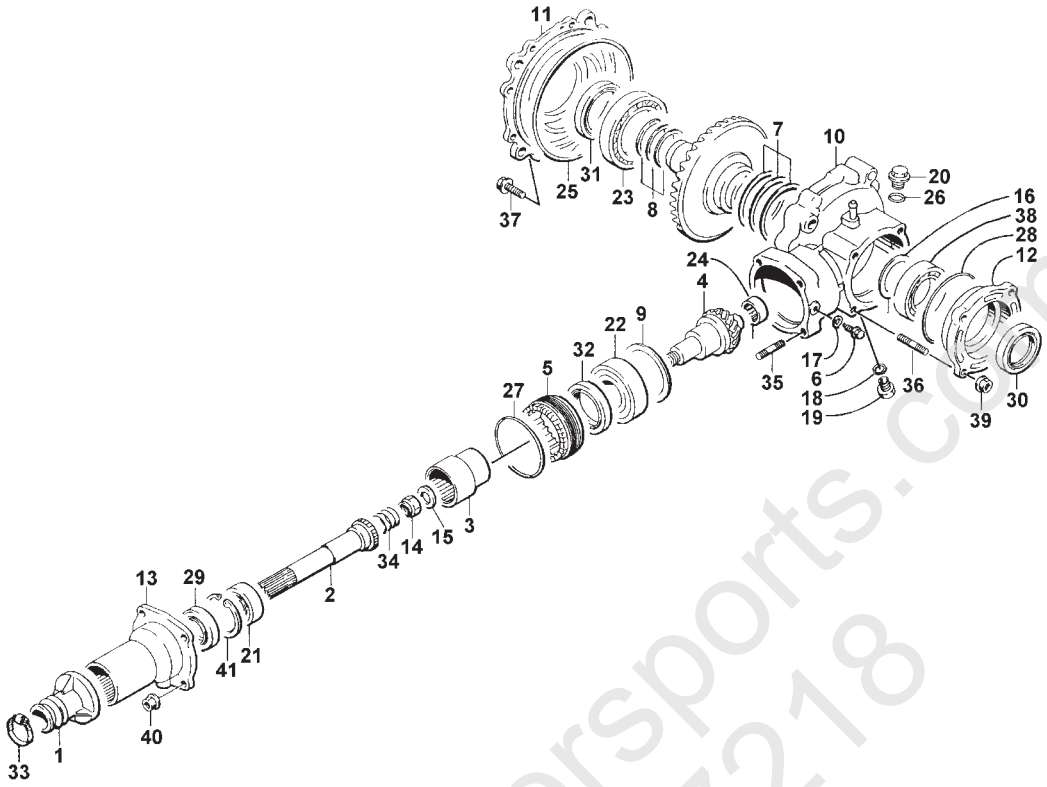

REAR BEVEL GEAR ASSEMBLY

0732-319

Ref.	Part No.	Qty.	Description	Ref.	Part No.	Qty.	Description
1	3435-051	1	Boot, Final Drive	22	3402-056	1	Bearing
2	3435-006	1	Shaft, Rear Final	23	3402-059	1	Bearing - Right
3	3435-008	1	Coupling, Rear	24	3402-061	1	Bearing, Final Drive Pilot
4	3435-012	1	Gear Set	25	3423-049	1	O-Ring, Bearing Case - Right
5	3435-015	1	Stopper, Rear Final	26	3423-057	1	O-Ring, Gear Oil Filler
6	3435-016	1	Pin, Bearing Stopper	27	3423-065	1	O-Ring, Final Bearing Stopper
7	3435-019	1	Shim Set	28	3003-335	1	O-Ring, Bearing Case - Left
8	3435-020	1	Shim Set	29	3435-048	1	Seal, Final Driven
9	3435-065	1	Shim Set	30	3402-073	1	Seal, Oil
10	3435-023	1	Case	31	3402-074	1	Seal, Oil
11	3435-026	1	Case - Right	32	3402-075	1	Seal, Oil
12	3435-027	1	Case - Left	33	3004-786	1	Clamp - Right
13	3435-028	1	Housing	34	3402-092	1	Spring
14	3423-025	1	Nut, Rear Drive Pinion	35	3004-279	4	Stud, Bolt
15	3423-029	1	Washer, Drive Nut	36	3004-301	2	Stud, Bolt - Left
16	3423-171	1	Washer - Left	37	3423-175	9	Bolt, Bearing - Right
17	3003-290	1	Gasket, Bearing Stopper Pin	38	3402-187	1	Bearing - Left
18	3402-012	1	Gasket, Oil Drain Plug	39	3004-333	2	Nut, Rear Left Case
19	3402-036	1	Plug, Oil Drain	40	3423-176	4	Nut, Rear Final Housing
20	3402-039	1	Plug, Gear Oil Filler	41	3423-194	1	Circlip Set
21	3402-052	1	Bearing				

World of Powersports.com
800-487-7218

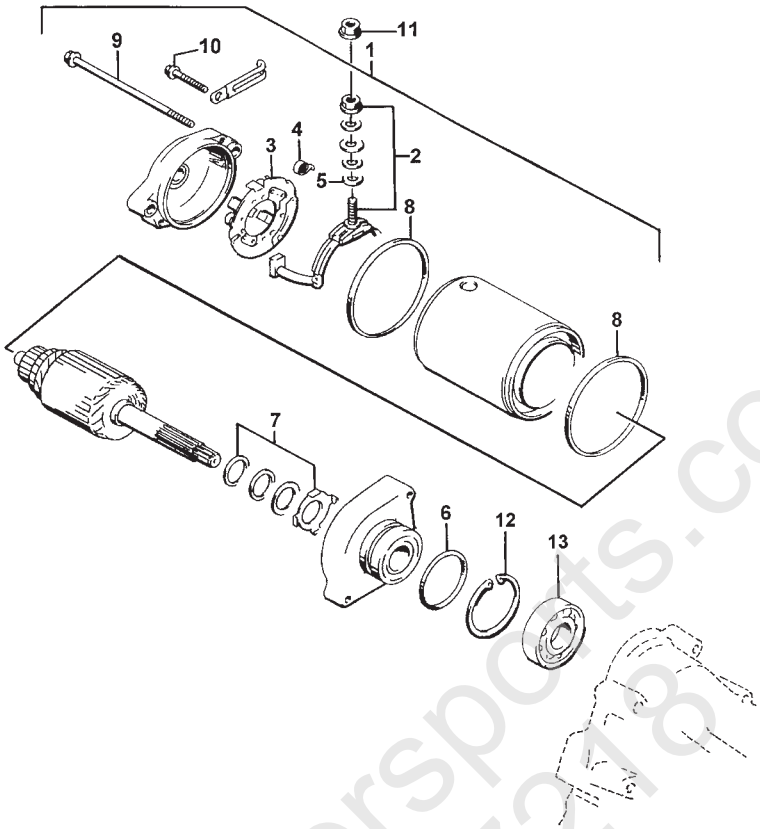

STARTER MOTOR ASSEMBLY

0732-320

Ref.	Part No.	Qty.	Description	Ref.	Part No.	Qty.	Description
1	3545-001	1	Motor, Starter Assembly (inc. 2-9)	8	3008-101	2	• O-Ring
2	3008-094	1	• Terminal Set, Brush	9	3423-085	2	• Bolt
3	3008-095	1	• Holder Set, Brush	10	3423-162	2	Bolt
4	3008-096	4	• Spring, Brush	11	3423-195	1	Nut
5	3008-164	1	• O-Ring	12	3423-201	1	Circlip
6	3423-084	1	• O-Ring	13	3402-043	1	Bearing, Pinion Shaft
7	3436-001	1	• Washer Set				

World of Powersports.com
800-407-7218

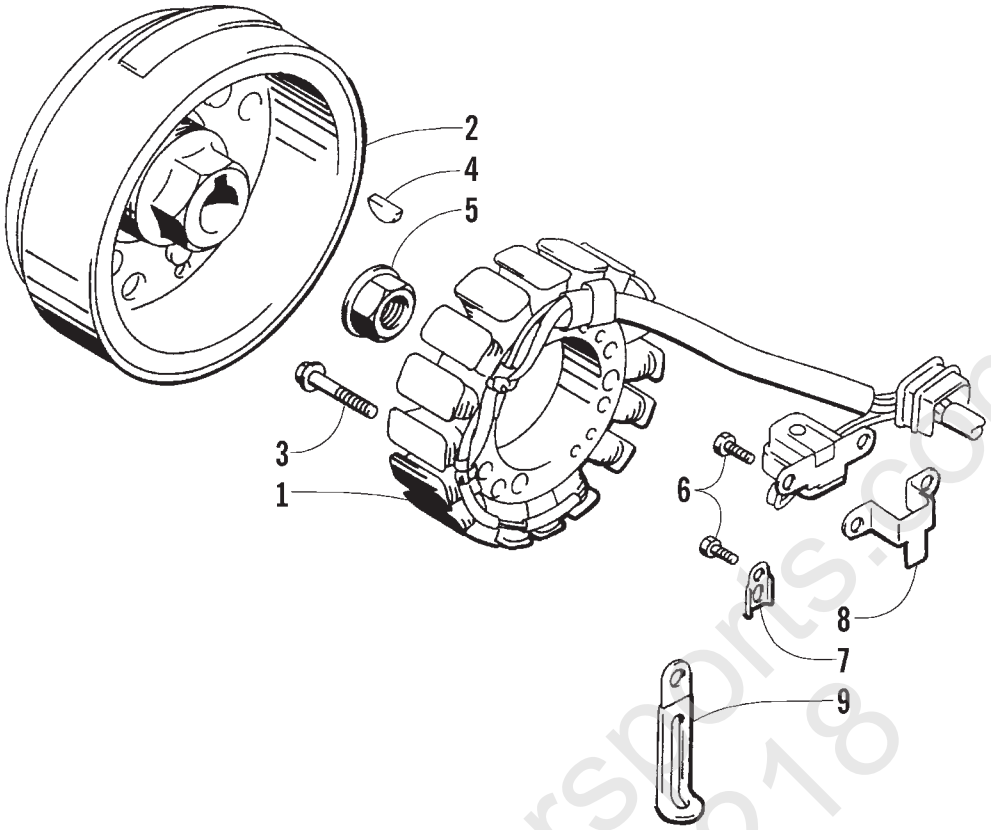

MAGNETO ASSEMBLY

0732-321

Ref.	Part No.	Qty.	Description	Ref.	Part No.	Qty.	Description
1	3430-011	1	Stator - Assembly	6	3423-005	3	Bolt
2	3430-012	1	Rotor	7	3430-005	1	Clamp, Magneto (No. 1)
3	3423-162	3	Bolt, Magneto	8	3430-006	1	Clamp, Magneto (No. 2)
4	0691-785	1	Key, Magneto	9	3004-761	1	Clamp, Magneto (No. 3)
5	3423-086	1	Nut, Magneto				

World of Powersports.com
800-497-7218

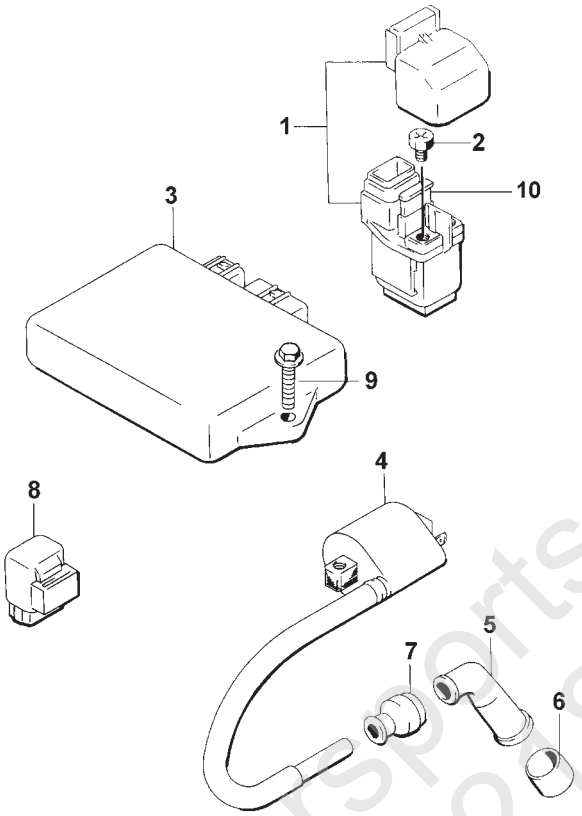

ELECTRICAL COMPONENTS ASSEMBLY

0732-322 * Not Illustrated

Ref.	Part No.	Qty.	Description	Ref.	Part No.	Qty.	Description
1	3530-001	1	Relay, Starter Motor - Assembly	7	3430-009	1	Seal, High Tension Cord
2	3423-020	2	Bolt	8	3530-008	1	Relay, Neutral Start - Assembly
3	3530-003	1	CDI Unit	9	8408-616	2	Screw, Cap
4	3530-004	1	Coil, Ignition - Assembly	10	8408-640	2	Bolt *
5	3430-007	1	Cap, Spark Plug	11	0107-630	2	Spacer, Fuel Pump *
6	3430-008	1	Seal, Spark Plug	12	8424-602	2	Nut, Hex *

World of Powersports.com
800-407-7218

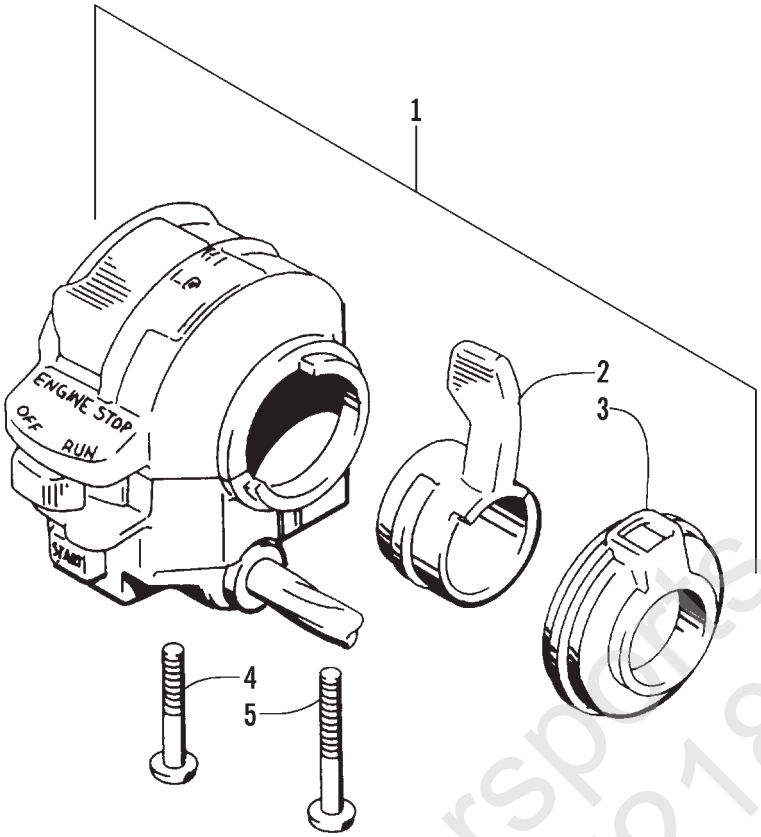

CONTROL SWITCH HOUSING ASSEMBLY

0732-323

Ref.	Part No.	Qty.	Description	Ref.	Part No.	Qty.	Description
1	3509-001	1	Switch, Handle - Assembly (inc. 2-5)	4	3423-196	1	• Screw, Cap
2	3409-009	1	• Lever, Choke	5	3423-197	1	• Screw, Cap
3	3409-010	1	• Cover, Choke				

World of Powersports.com
800-467-7218

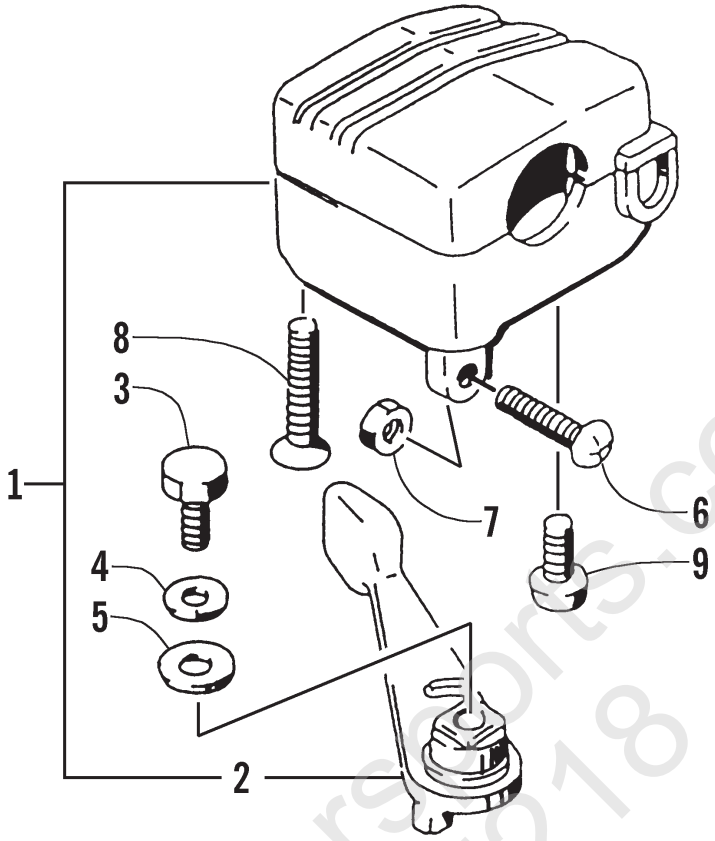

THROTTLE CASE ASSEMBLY

0732-324

Ref.	Part No.	Qty.	Description	Ref.	Part No.	Qty.	Description
1	3509-002	1	Case, Throttle - Assembly (inc. 2-9)	6	3423-014	1	• Screw, Cap
2	3409-001	1	• Lever	7	3423-198	1	• Nut
3	3004-533	1	• Bolt	8	3423-199	2	• Screw, Cap
4	3004-447	1	• Washer, Lock	9	3004-638	1	• Screw, Cap
5	3003-030	1	• Washer				

World of Powersports.com
800-407-7218

Related Items

Model No. 96A4A-AP

0436-013	Bag, Rack Utility - Front
0436-012	Bag, Rack Utility - Rear
0436-025	Blade, 48 in. Plow
0436-010	Cover, Black and Green
0436-011	Cover, Camoflage
0436-047	Cover, Padded Bar - Black
0436-046	Cover, Padded Bar - Green
0436-035	Engine Block Heater
3402-107	Gasket Set
0436-023	Gun Scabbard
2255-464	Manual, Parts
2255-344	Manual, Operator's
2255-466	Manual, Service
0436-050	Mounting Bracket, Gun Scabbard
0436-051	Mounting Bracket, Portable Lights
0436-008	Mounting Plate with Tow Loops
0436-052	Plow Mounting Kit, Winch Lift
0436-053	Plow Mounting Kit, Mechanical Lift
0436-044	Primer Kit
0436-040	Portable Light, Spot
0436-039	Portable Light, Work
0436-014	Safety Flag
0217-708	Spark Plug (CR7E)
0436-032	Tie Down, Black
0436-031	Tie Down, Green
0436-041	Tire Repair, Standard
0436-042	Tire Repair, Deluxe
0436-045	Tire Sealant
0436-034	Tool Holder
0436-024	Winch Kit
0436-068	Winch Accessories Kit

World of Powersports.com
800-407-7218

ARCTIC CAT®